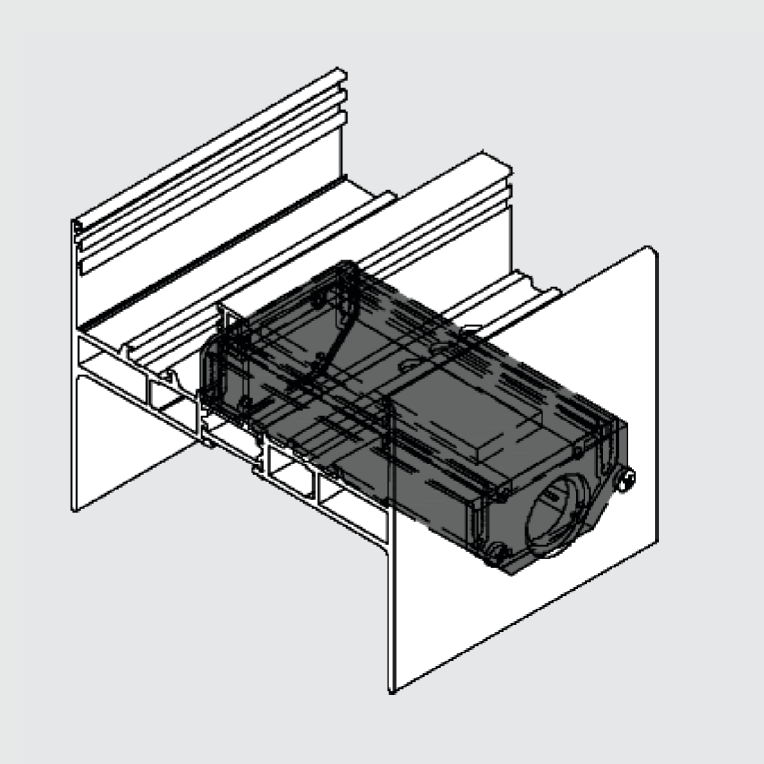

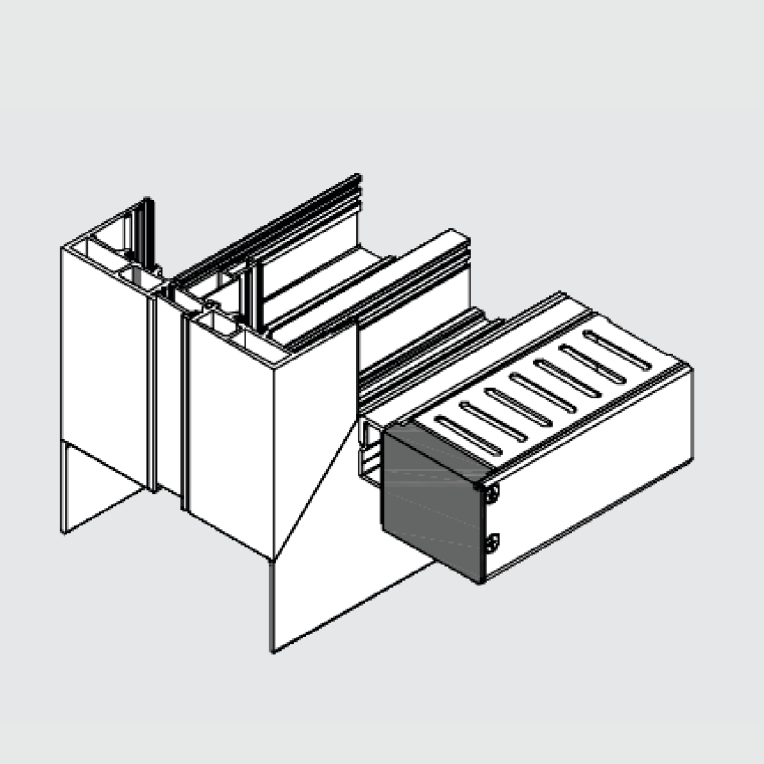

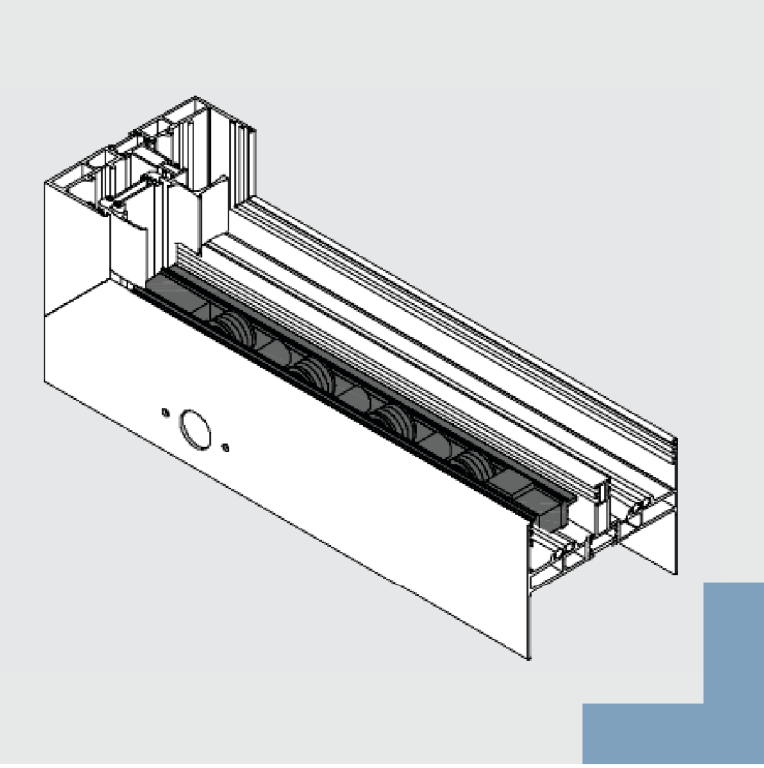

ARTYAL

DESIGN - FABRICATION

TECHNAL®

ARTYAL

DESIGN - FABRICATION

TECHNAL®

TECHNAL®

Artyal

Cuting measure plans

Hardware & assembly drawings

Enclosures

Refs. SAPA	Refs. TECHNAL
D9K025	TGD1100
D9K029	TGD1101
D9K035	TGD1102
D9K039	TGD1103
D9V004	TGD1200
D9V005	TGD1201
D9V007	TGD1202
D9V008	TGD1203
D9V010	TGD1204
D9V011	TGD1205
D9V031	TGD1206
D9V032	TGD1207
D9V033	TGD1208
D9V034	TGD1209
D9C001	TGD1210
D8C003	TGD2404
D8A005	TGD2400
D9A050	TGD2401
D9A051	TGD2402
D9V113	TGD2200
D9V116	TGD2201
D9V119	TGD2202
D9V120	TGD2203
D9V139	TGD2204
D9V140	TGD2205
D8A002	TGD2500
D8A003	TGD2501
D8A014	TGD2502
D8A006	TGD2403
D9V117	TGD2206
D9V125	TGD2207
D9V126	TGD2208
CO0153	TGD3600
HV9M15	TGD3601
HV9M16	TGD3602
HV9M17	TGD3603
HV9N01	TGD3604
HV9N03	TGD3605
HV4K05	TGD3606
HV4M12	TGD3607
CO0208	TGD3800
KU0011	TGD4000
VS0104	TGD3801
CO0205	TGD3802
CO0206	TGD3803
CO2281	TGD3700
KU0012	TGD4004
KU0013	TGD4001
CO0207	TGD3804
CO0204	TGD3805
CO0203	TGD3608
CO0220	TGD3609
CO0210	TGD3806
CO0219	TGD3807
CO0198	TGD3808

Refs. SAPA	Refs. TECHNAL
VS1420	TGD3809
CO1131	TGD3810
VS9972	TGD3811
VS9973	TGD3812
VS9974	TGD3813
CO0180	TGD3610
CO0159	TGD3611
CO0201	TGD3612
CO0199	TGD3814
CO1141	TGD3613
CO1142	TGD3614
CO0167	TGD3615
CO0168	TGD3616
CO0169	TGD3701
CO1144	TGD3617
CO0157	TGD3618
CO2271	TGD3619
CO2272	TGD3620
CO2273	TGD3621
CO2274	TGD3622
CO0209	TGD3623
CO0211	TGD3815
93082	TGD3816
93083	TGD3817
778-500	TGD3702
CO1140	TGD3703
KU0004	TGD4002
KU0015	TGD4005
CO0214	TGD6001
SF3054	TGD6002
SF3055	TGD6003
ZB0052	TGD6004
SF2019	TGD6005
SF2020	TGD6006
SF3056	TGD6007
CO1151	TGD6008
SF2018	TGD6009
SF9065	TGD6010
SF9066	TGD6011
VS9979	TGD3818
SV2088	TGD6012
SV2089	TGD6013
CO1199	TGD4003
SV0037	TGD6014
SV2090	TGD6015
CO0200	TGD6000
SV2069	TGD6016
RU0105	TGD5001
RU9121	TGD5002
RU9152	TGD5003
RU9153	TGD5004
RU9154	TGD5005
MD0406	TGD5006
MD0408	TGD5007
MD0410	TGD5008

Refs. SAPA	Refs. TECHNAL
BT0007	TGD5000
82K313	TGD3722
SCE516	TGD3704
290-107	TGD3705
82K413	TGD3706
82K416	TGD3707
82K419	TGD3708
82K425	TGD3709
82K519	TGD3710
80H510	TGD3711
SCZ832	TGD3712
SCZ822	TGD3723
SCY504	TGD3713
291-300	TGD3714
82L310	TGD3715
280-203	TGD3716
84Z500	TGD3717
SCZ821	TGD3724
SCZ825	TGD3725
82L416	TGD3718
SCZ823	TGD3726
80N516	TGD3719
SCZ829	TGD3727
SCZ830	TGD3720
SCZ831	TGD3721
92256	TGD3728
CO0237	TGD4006
D9V112	TGD2209

TECHNAL®

System information

Typical section

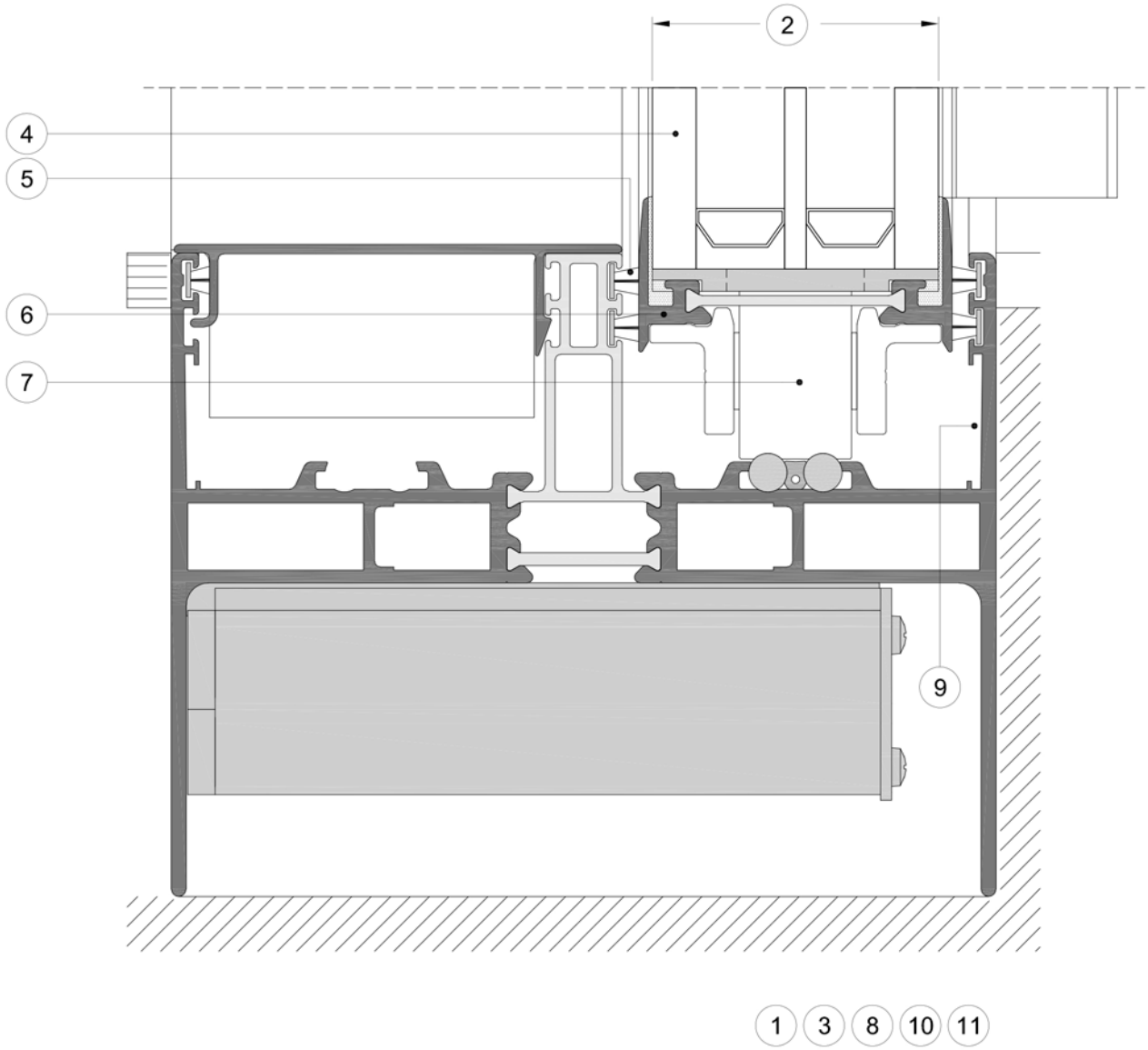

1. Thermally insulated sliding system for aluminium windows & doors.
2. Building depth frame: 150 mm,
   Depth vent: 57 mm.
3. Slim interlocking profile: 26 or 38 mm.
4. Glass:
   40 - 46 mm / 47 - 52 mm.
5. Efficient hidden drainage with increased hydraulic level,
   double fin-seal brushes ensure perfect weather resistance.
6. Perfect thermal insulation by means of glass fibre reinforced polyamide insulation strips.
7. Aluminium tandem rollers with stainless steel wheels for noiceless operation (max 450 kg/sliding vent).
8. Mitred profiles.
9. Self-tighening stainless steel leveling corner.
10. The frame upstand allows the internal floor finishes to be flush with the inner and outer frame and thus avoids thresholds.
11. Frameless aspect by concealling the outer frame in the building construction.

Artyal - Small glazing 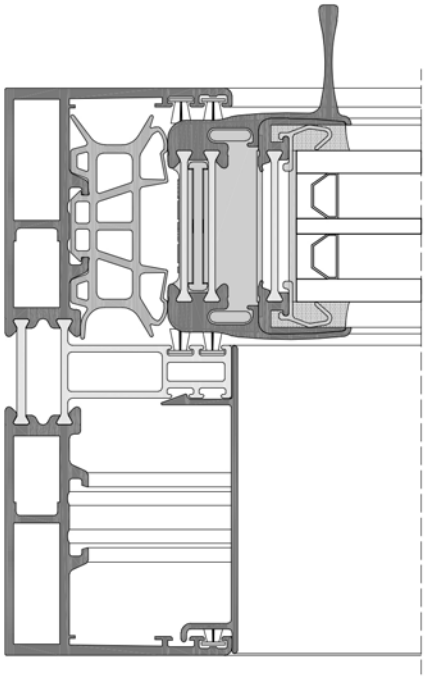	- Glazing: 40 - 46 mm.
Artyal - Thick glazing 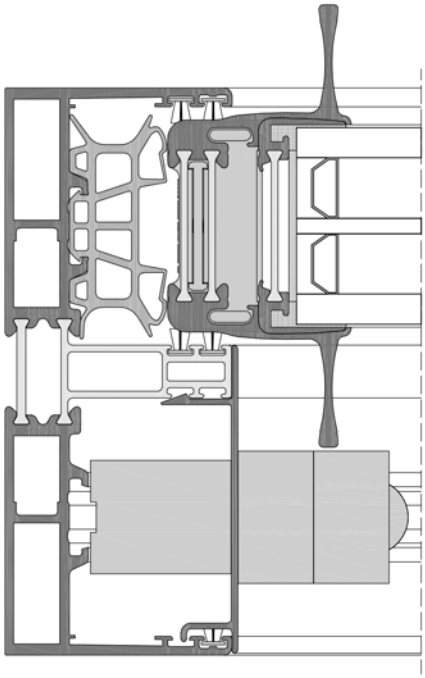	- Glazing: 47 - 52 mm.

System information

Applications

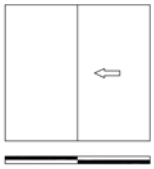

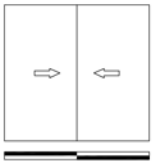

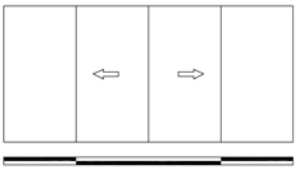

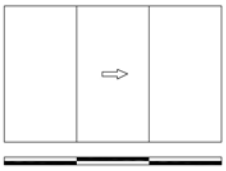

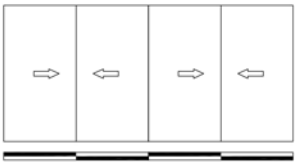

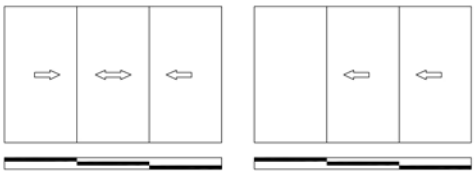

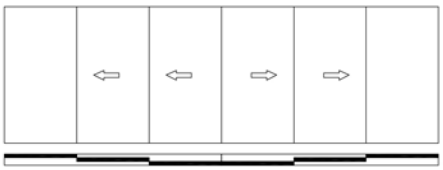

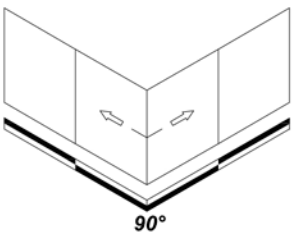

	Type	Dimension W x H (mm)	Result	Test institute Document number
Functional test				
	2-rail slide-slide	4000 x 2800	C3, E750, 3 (EN12210, EN12208, EN12207)	WTCB NB 1136 CAR 13270
	2-rail slide-slide	3313 x 3789	C2, 4A, 3 (EN12210, EN12208, EN12207)	WTCB NB 1136 CAR 16195/1
	2-rail slide-fix	2400 x 2500	Blower door test: 50 Pa 1.36m³/hm: 1.57m³/hm² pressure 0.64 m³/hm: 0.73 m³/hm² under pressure	WTCB NB 1136 CAR 16169
	2-rail fix-slide-slide-fix	5045 x 2857	C2, 7A, 3 (EN12210, EN12208, EN12207)	WTCB NB 1136 CAR 14347
	Corner solution	(2400+1156) x 2500	C3, 8A, 3 (EN12210, EN12208, EN12207)	WTCB NB 1136 CAR 14223
Accoustical test				
	2-rail slide-fix	4509 x2788	Rw(C;Ctr) = 41(-1;-4)dB Rw(C;Ctr) = 42(-2;-5)dB	CSTB NB 0679 B15.056.001.310
	2-rail slide-slide	3950 x 2400	Rw(C;Ctr) = 37(-1;-1)dB Rw(C;Ctr) = 34(-1;-1)dB	CSTB NB 0679 AC14-26049532
Durability				
	2-rail	2500 x 2800 (1206 kg)	Class 3, 20 000 cycli (EN 1191) on demand, please contact Sapa	WTCB NB 1136 CAR 16034
Salt spray test				
	Carriage and rollers SV0037		Degree 5 (EN 1670)	Coatings Research Institute Limelette ES-160762.a
Burglar resistance test				
	RC2: on demand			

System Profiles

A	Chamber for support
B	Profile chamber for outside corner
C	Profile chamber for inside corner
	Supports
	Crimp cleat
	Cleat for conical pegs
	Cleat for eccentrics
	Adjustable cleat for eccentrics

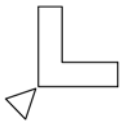	Mechanical cleat
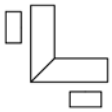	Mechanical cleat with fixing screws
	Supports for rebate
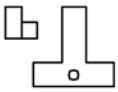	T-connector for eccentrics type 1
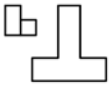	T-connector for eccentrics type 2
	Adjustable T-connector for eccentrics
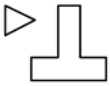	T-connector for conical pegs
	Adjustable T-connector for conical pegs
	Armour plate

System Profiles

List of symbols

	Page number
X Y Y X	Position of the profile
	Length of the profile (m)
Ixx Iyy	Moments of inertia according to XX/YY (cm^4)
	Anodising or coating surface (dm^2/m)
	Polishing surface (dm^2/m)
xxxxxx	Reference tool
	Screw connection

	Silicone, glue
	To break or to cut
	Packing unit
	Bi-metal effect
2	Forced entry resistance, European class 2
3	Forced entry resistance, European class 3
	Bullet proof
	CNC machine operation
sapa: buildingsystem	Not supplied by SAPA

FRAME	No	
	***D9K025*** TGD1100	18
	***D9K029*** TGD1101	19
	***D9K035*** TGD1102	20
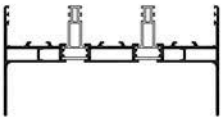	***D9K039*** TGD1103	20

TRANSOM	No	
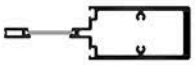	***D9T001***	21

VENT	No	
	***D9V004*** TGD1200	22
	***D9V005*** TGD1201	22

VENT	No	
	***D9V007*** TGD1202	23
	***D9V008*** TGD1203	23
	***D9V010*** TGD1204	24
	***D9V011*** TGD1205	24
	***D9V031*** TGD1206	25
	***D9V032*** TGD1207	25
	***D9V033*** TGD1208	26
	***D9V034*** TGD1209	26

System Profiles

Survey-Profiles

CORNER PROFILE	No	
	***D9C001*** TGD1210	27

ADDITIONAL PROFILES	No	
	***D8C003*** TGD2404	28
	***D8C005***	28

INSULATION PROFILE AND FINISHING PROFILE	No	
 L=7000mm	***KU0004*** TGD4002	29
 L=7000mm	***KU0012*** TGD4004	29
 L=7000mm	***KU0013*** TGD4001	30
 L=7000mm	***KU0015*** TGD4005	30

COVER PROFILE	No	
	***D8A005*** TGD2400	31
	***D8A006*** TGD2403	31
	***D8A013***	32
	***D9A050*** TGD2401	32
	***D9A051*** TGD2402	33
	***D9V112*** TGD2209	33
	***D9V113*** TGD2200	34
	***D9V116*** TGD2201	35
	***D9V117*** TGD2206	36

COVER PROFILE	No	
	***D9V118***	36
	***D9V119*** TGD2202	37
	***D9V120*** TGD2203	38
	***D9V125*** TGD2207	39
	***D9V126*** TGD2208	40
	***D9V139*** TGD2204	41
	***D9V140*** TGD2205	42

GUTTER AND BRACKET	No	
	***D8A002*** TGD2500	43

GUTTER AND BRACKET	No	
	***D8A003*** TGD2501	43
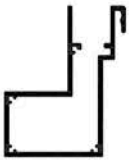	***D8A014*** TGD2502	44

TECHNAL®

System Profiles

Frame

D9K025
TGD1100

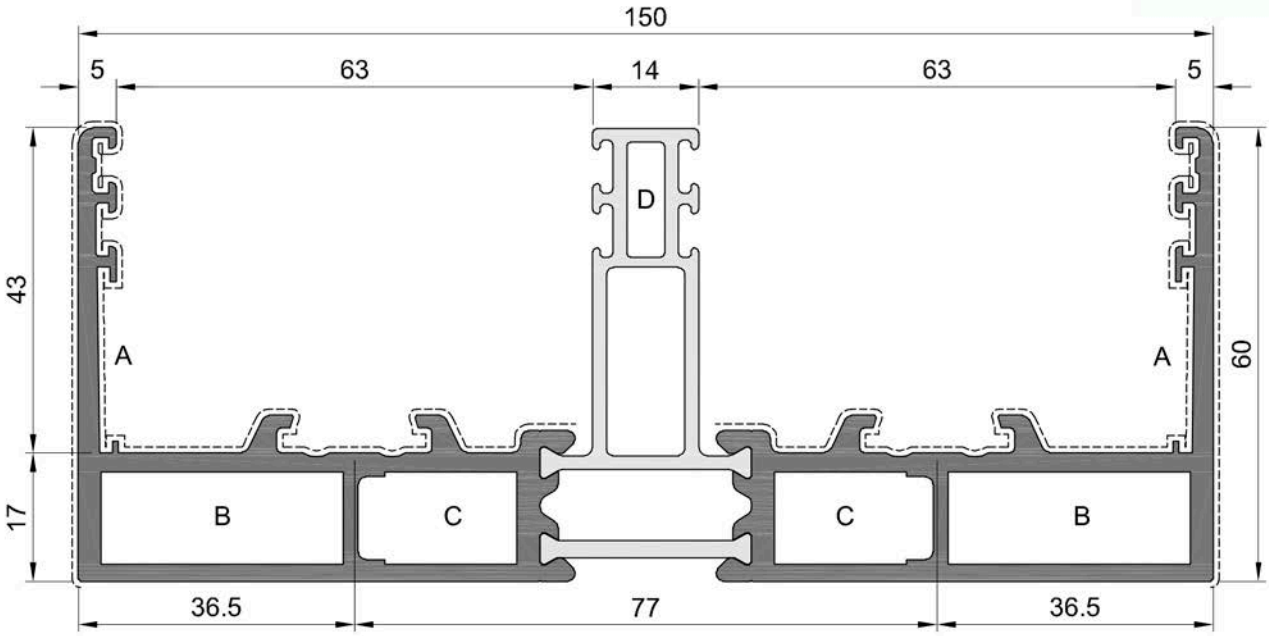

dm²/m	60.32	A	HV4M12	TGD3607	C	HV9M17	TGD3603	-	-			207
dm²/m	45.81	B	HV9M16	TGD3602	D	CO0153	TGD3600	-	-			89
Iyy cm⁴	24.80	B	HV9N03	TGD3605	-	-		-	-		m	7.0
mm	**800**	**1000**	**1200**	**1400**	**1600**	**1800**	**2000**	**2200**	**2400**	**2600**	**2800**	**3000**
Ixx cm⁴	93.06	108.94	125.67	142.41	158.59	173.82	187.91	200.75	212.37	222.81	232.16	240.51

D9K029
TGD1101

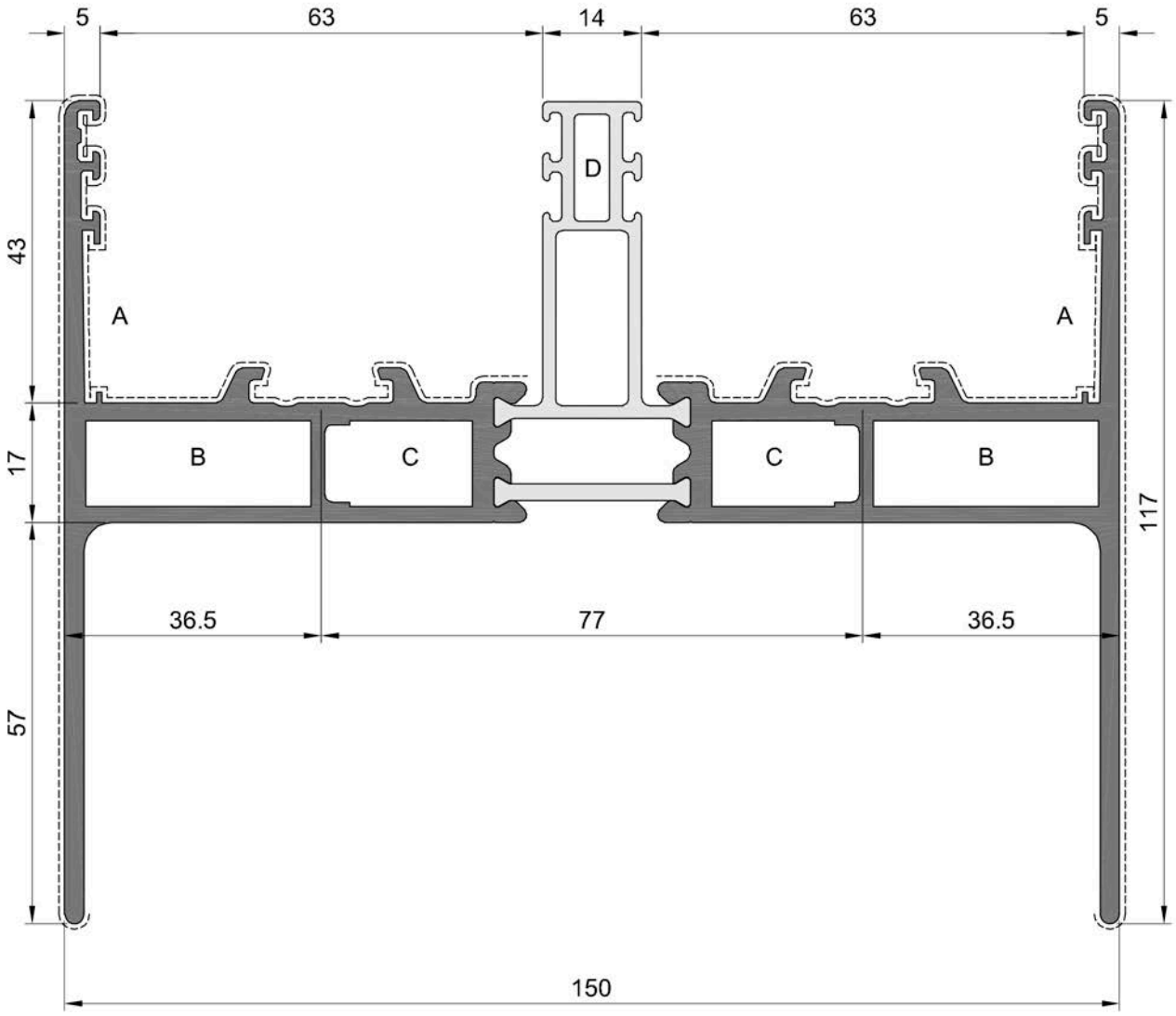

dm²/m	82.56	A	HV4M12	TGD3607	C	HV9M17	TGD3603	-	-			207
dm²/m	57.41	B	HV9M16	TGD3602	D	CO0153	TGD3600	-	-			89
Iyy cm⁴	81.15	B	HV9N03	TGD3605	-	-		-	-		m	7.0
mm	**800**	**1000**	**1200**	**1400**	**1600**	**1800**	**2000**	**2200**	**2400**	**2600**	**2800**	**3000**
Ixx cm⁴	119.21	140.34	163.20	186.73	210.11	232.73	254.18	274.22	292.74	309.72	325.19	339.25

System Profiles

Frame

TECHNAL®

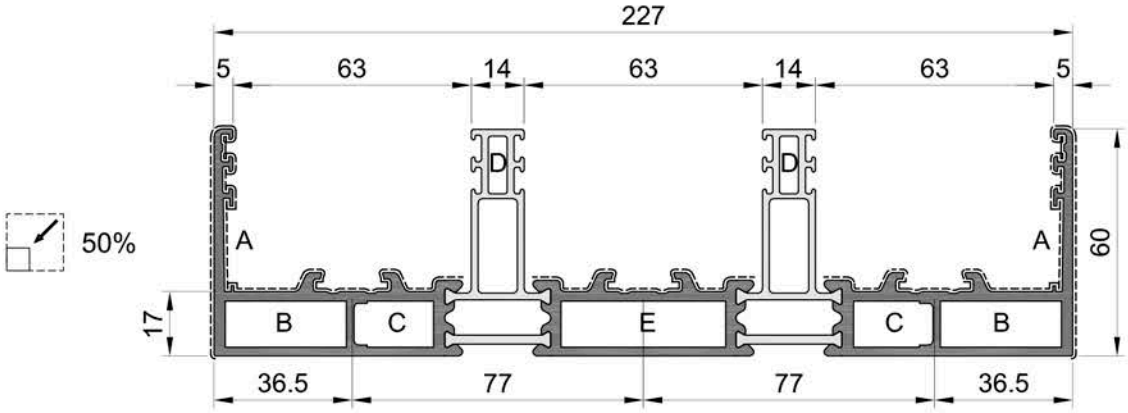

D9K035
TGD1102

dm²/m	76.69	A	HV4M12 TGD3607		C	HV9M17 TGD3603		E	HV9M15 TGD3601			207
dm²/m	54.54	B	HV9M16 TGD3602		D	CO0153 TGD3600		-	-			114
Iyy cm⁴	27.91	B	HV9N03 TGD3605		E	HV9N01 TGD3604		-	-		m	7.0
mm	**800**	**1000**	**1200**	**1400**	**1600**	**1800**	**2000**	**2200**	**2400**	**2600**	**2800**	**3000**
Ixx cm⁴	177.30	221.62	265.95	310.27	354.59	398.92	443.24	487.56	531.89	576.21	620.54	664.86

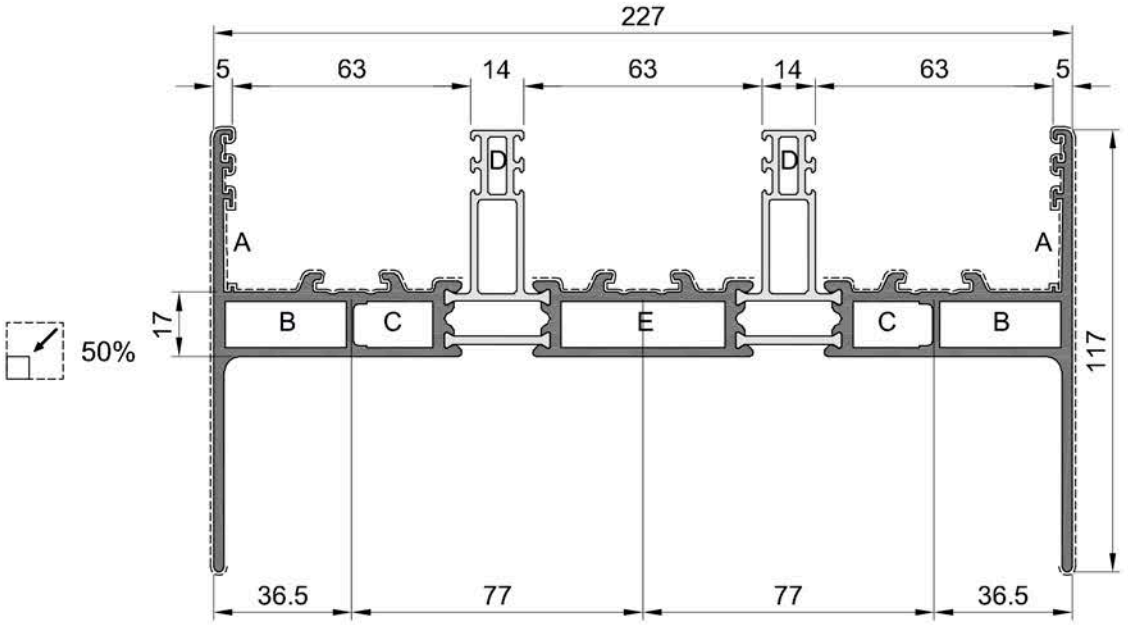

D9K039
TGD1103

dm²/m	98.82	A	HV4M12 TGD3607		C	HV9M17 TGD3603		E	HV9M15 TGD3601			207
dm²/m	66.15	B	HV9M16 TGD3602		D	CO0153 TGD3600		-	-			115
Iyy cm⁴	83.72	B	HV9N03 TGD3605		E	HV9N01 TGD3604		-	-		m	7.0
mm	**800**	**1000**	**1200**	**1400**	**1600**	**1800**	**2000**	**2200**	**2400**	**2600**	**2800**	**3000**
Ixx cm⁴	252	315	378	441	504	567	630	693	756	819	882	945

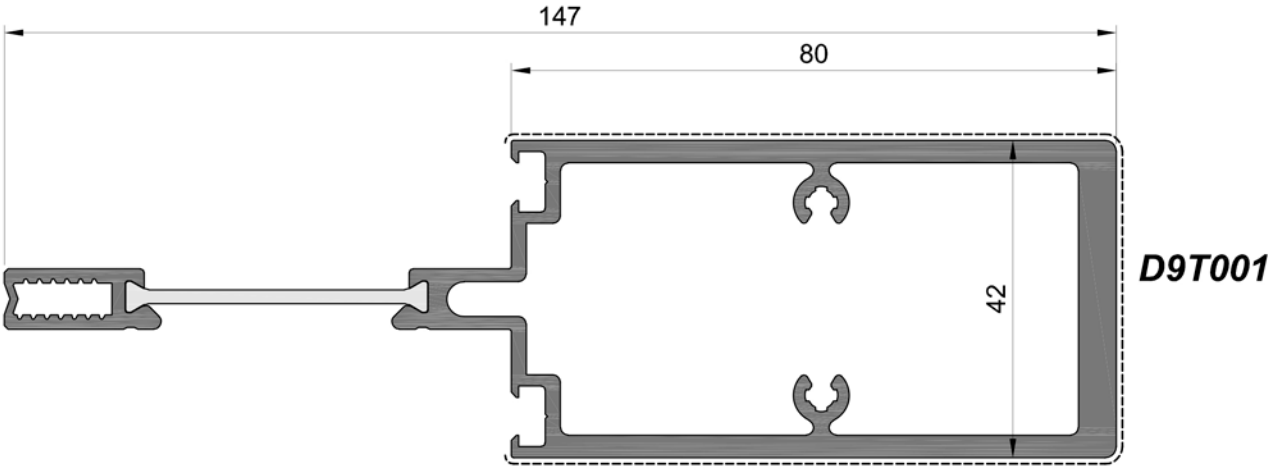

dm²/m	20.51	-	-		-	-		-	-			238
dm²/m	20.11	-	-		-	-		-	-			113
Iyy cm⁴	22.03	-	-		-	-		-	-		m	7.0
mm	**800**	**1000**	**1200**	**1400**	**1600**	**1800**	**2000**	**2200**	**2400**	**2600**	**2800**	**3000**
Ixx cm⁴	101.80	109.66	116.25	121.59	125.88	129.30	132.04	134.26	136.07	137.55	138.78	139.81

System Profiles

Vent

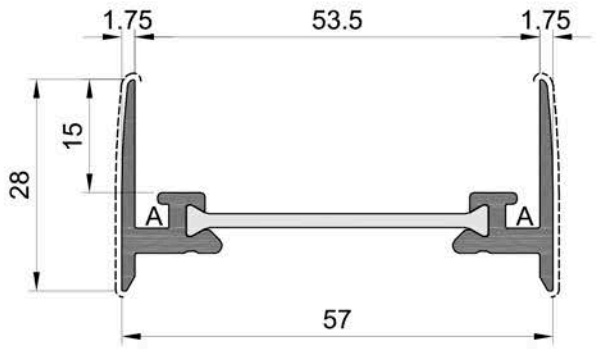

D9V004
TGD1200

dm²/m	17.42	A	HV4K05 / TGD3606	-	-	-	-				188	
dm²/m	5.88	* Always anodised profile									89	
Iyy cm⁴	0.67										m	7.0
mm	800	1000	1200	1400	1600	1800	2000	2200	2400	2600	2800	3000
Ixx cm⁴	3.66	4.78	5.76	6.58	7.26	7.81	8.27	8.64	8.95	9.21	9.42	9.60

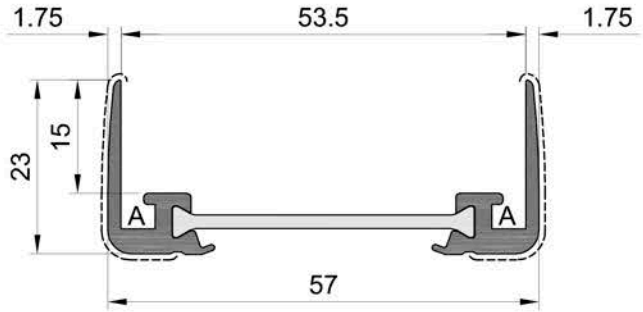

D9V005
TGD1201

dm²/m	15.99	A	HV4K05 / TGD3606	-	-	-	-				188	
dm²/m	6.20	* Always anodised profile									96	
Iyy cm⁴	0.56										m	7.0
mm	800	1000	1200	1400	1600	1800	2000	2200	2400	2600	2800	3000
Ixx cm⁴	3.41	4.40	5.26	5.96	6.54	7.01	7.38	7.69	7.95	8.15	8.33	8.47

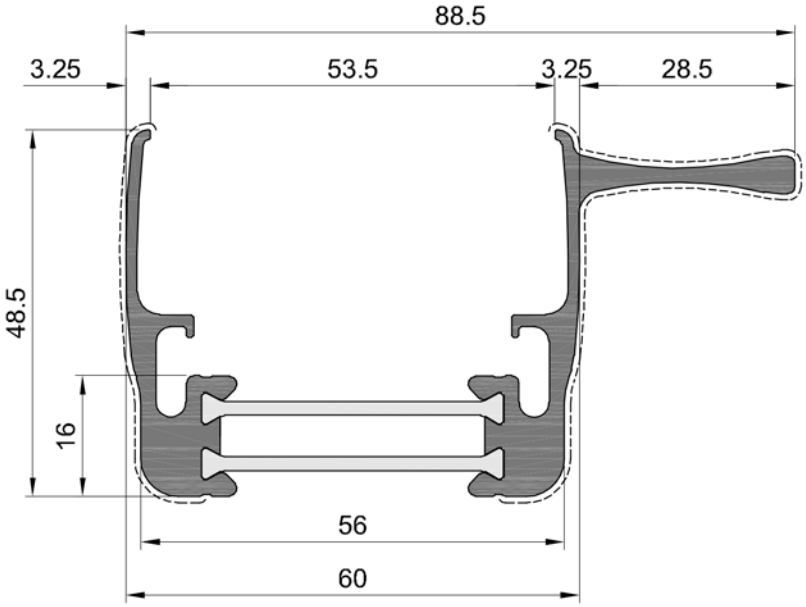

D9V007
TGD1202

dm²/m	32.07	-	-		-	-		-	-			204
dm²/m	16.90	-	-		-	-		-	-			94
Iyy cm⁴	10.78	-	-		-	-		-	-		m	7.0
mm	**800**	**1000**	**1200**	**1400**	**1600**	**1800**	**2000**	**2200**	**2400**	**2600**	**2800**	**3000**
Ixx cm⁴	9.39	11.83	14.34	16.80	19.12	21.27	23.21	24.96	26.51	27.89	29.11	30.19

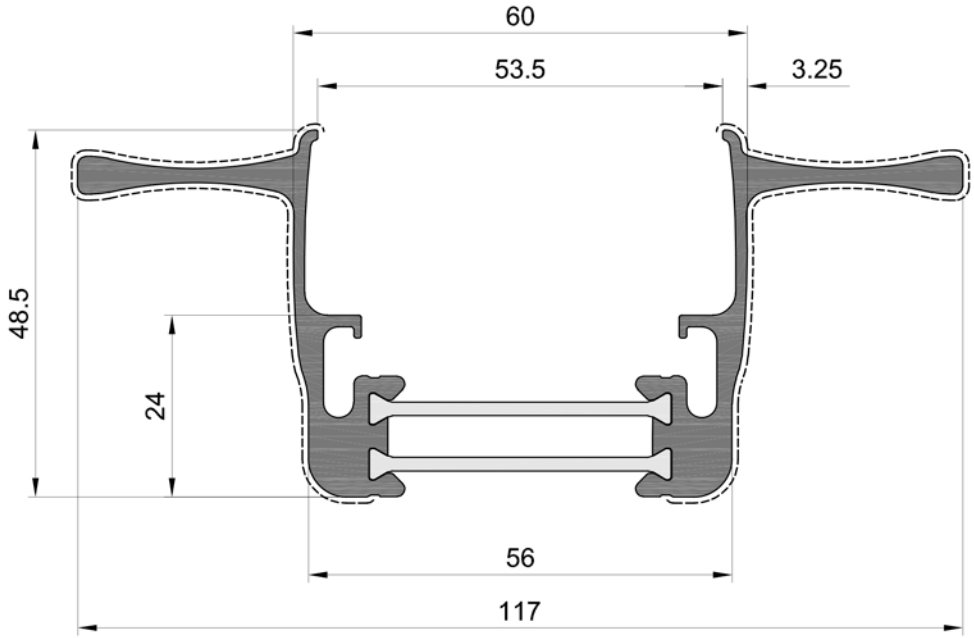

D9V008
TGD1203

dm²/m	37.69	-	-		-	-		-	-			204
dm²/m	22.51	-	-		-	-		-	-			127
Iyy cm⁴	15.49	-	-		-	-		-	-		m	7.0
mm	**800**	**1000**	**1200**	**1400**	**1600**	**1800**	**2000**	**2200**	**2400**	**2600**	**2800**	**3000**
Ixx cm⁴	14.20	17.42	20.83	24.26	27.58	30.73	33.64	36.31	38.74	40.92	42.88	44.63

System Profiles

Vent

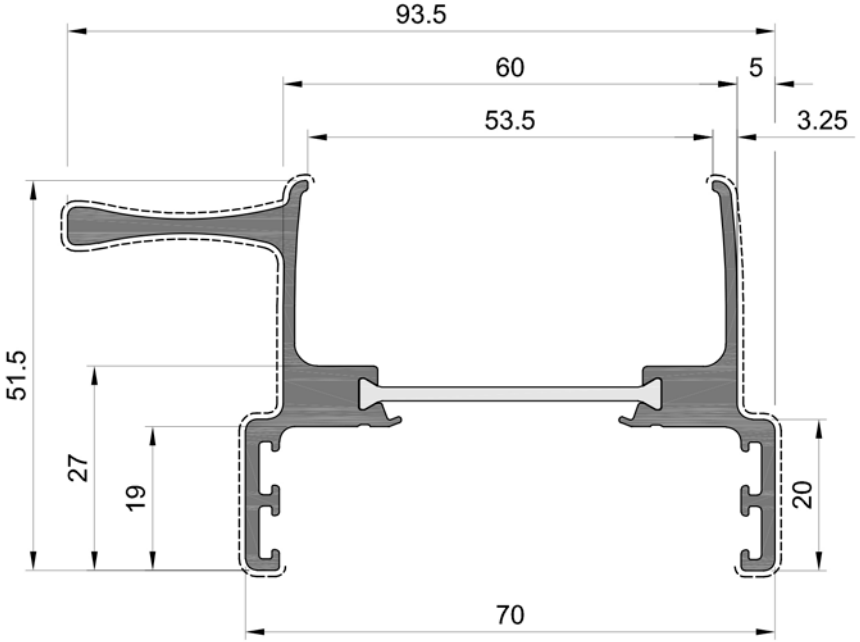

D9V010
TGD1204

dm²/m	36.77	-	-		-	-		-	-		206	
dm²/m	17.78	-	-		-	-		-	-		127	
Iyy cm⁴	8.03	-	-		-	-		-	-		m 7.0	
mm	**800**	**1000**	**1200**	**1400**	**1600**	**1800**	**2000**	**2200**	**2400**	**2600**	**2800**	**3000**
Ixx cm⁴	15.14	19.26	23.01	26.27	29.04	31.36	33.30	34.92	36.27	37.41	38.37	39.18

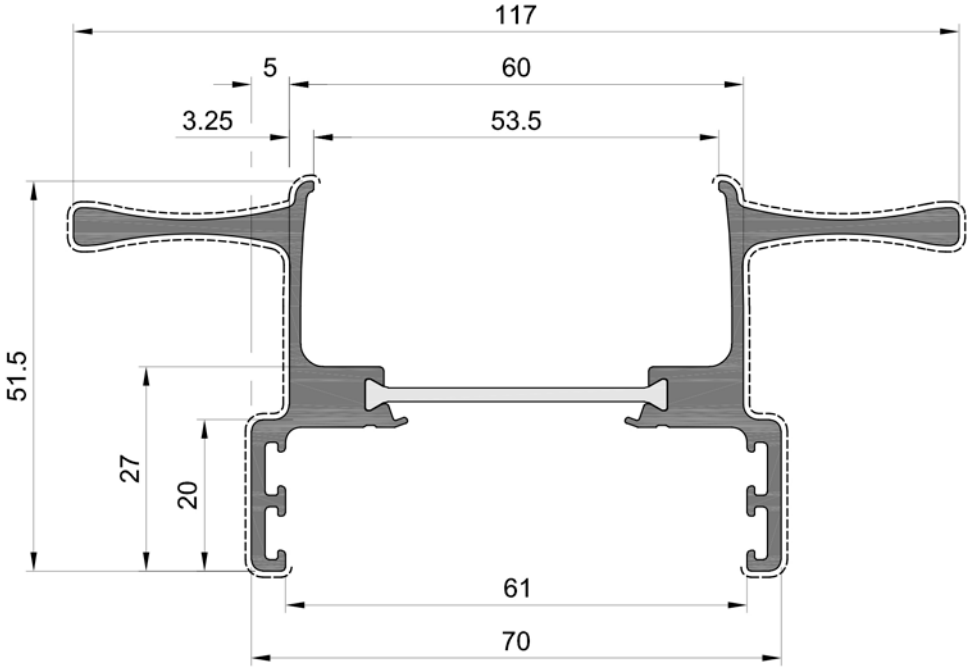

D9V011
TGD1205

dm²/m	42.28	-	-		-	-		-	-		206	
dm²/m	23.40	-	-		-	-		-	-		127	
Iyy cm⁴	11.35	-	-		-	-		-	-		m 7.0	
mm	**800**	**1000**	**1200**	**1400**	**1600**	**1800**	**2000**	**2200**	**2400**	**2600**	**2800**	**3000**
Ixx cm⁴	14.10	17.79	21.68	25.56	29.31	32.84	36.10	39.07	41.76	44.17	46.33	48.26

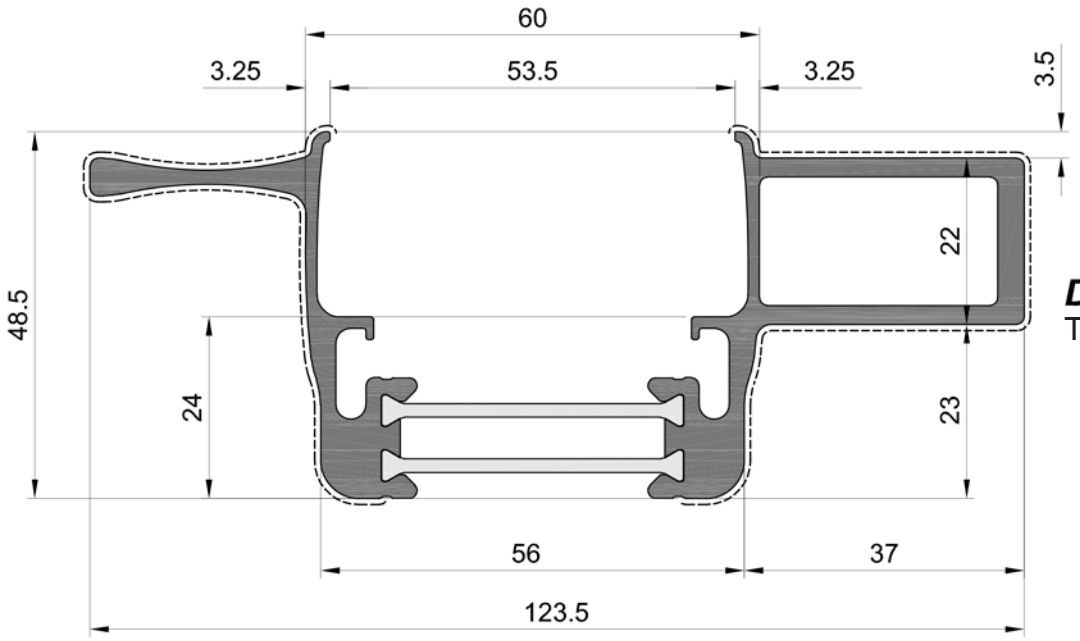

D9V031
TGD1206

dm²/m	38.98	-	-		-	-		-	-			205
dm²/m	23.82	-	-		-	-		-	-			128
Iyy cm⁴	16.49	-	-		-	-		-	-		m	7.0
mm	**800**	**1000**	**1200**	**1400**	**1600**	**1800**	**2000**	**2200**	**2400**	**2600**	**2800**	**3000**
Ixx cm⁴	23.83	28.18	32.87	37.69	42.46	47.07	51.43	55.49	59.23	62.66	65.78	68.61

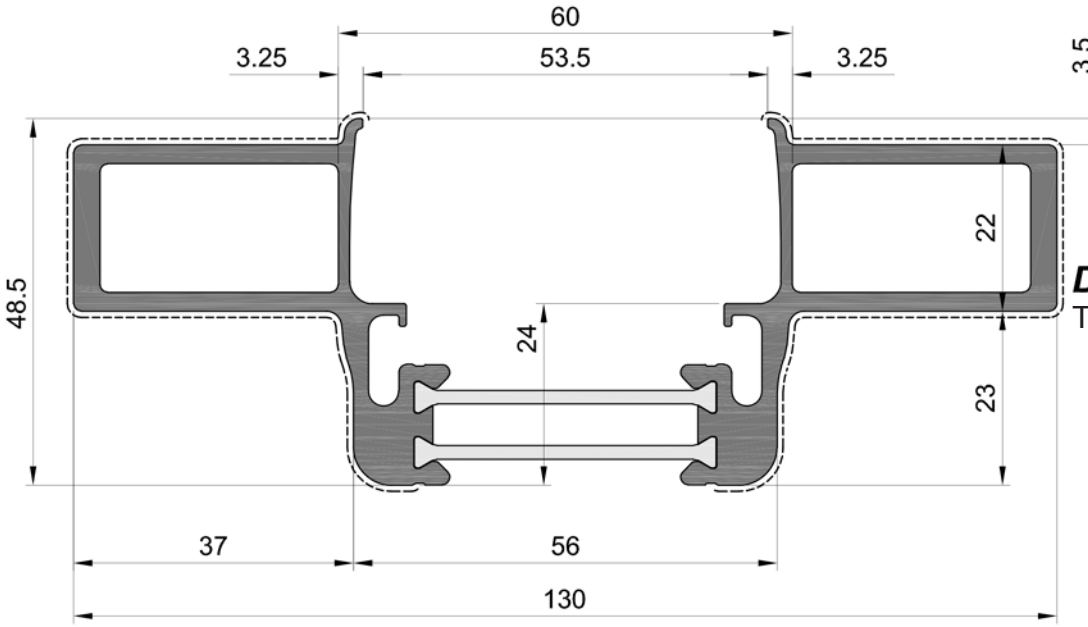

D9V032
TGD1207

dm²/m	40.27	-	-		-	-		-	-			205
dm²/m	25.12	-	-		-	-		-	-			128
Iyy cm⁴	17.49	-	-		-	-		-	-		m	7.0
mm	**800**	**1000**	**1200**	**1400**	**1600**	**1800**	**2000**	**2200**	**2400**	**2600**	**2800**	**3000**
Ixx cm⁴	33.80	39.52	45.82	52.45	59.16	65.80	72.22	78.33	84.08	89.44	94.39	98.96

System Profiles

Vent

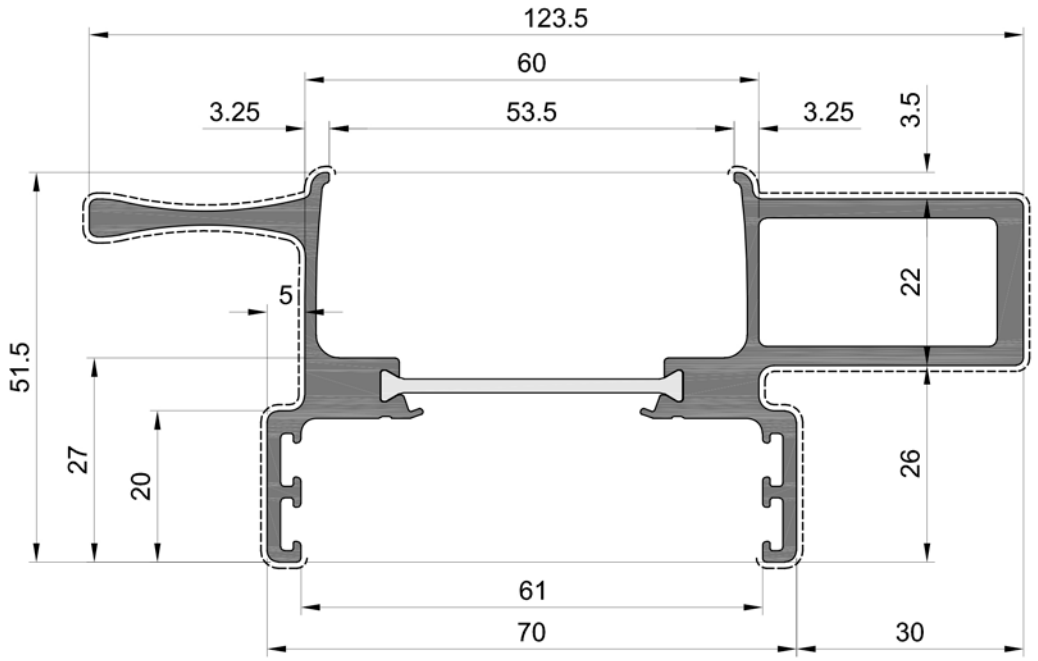

D9V033
TGD1208

dm²/m	43.52	-	-		-	-		-	-			206
dm²/m	24.64	-	-		-	-		-	-			128
Iyy cm⁴	12.15	-	-		-	-		-	-		m	7.0
mm	**800**	**1000**	**1200**	**1400**	**1600**	**1800**	**2000**	**2200**	**2400**	**2600**	**2800**	**3000**
Ixx cm⁴	22.59	27.42	32.62	37.94	43.19	48.23	52.99	57.40	61.46	65.16	68.52	71.56

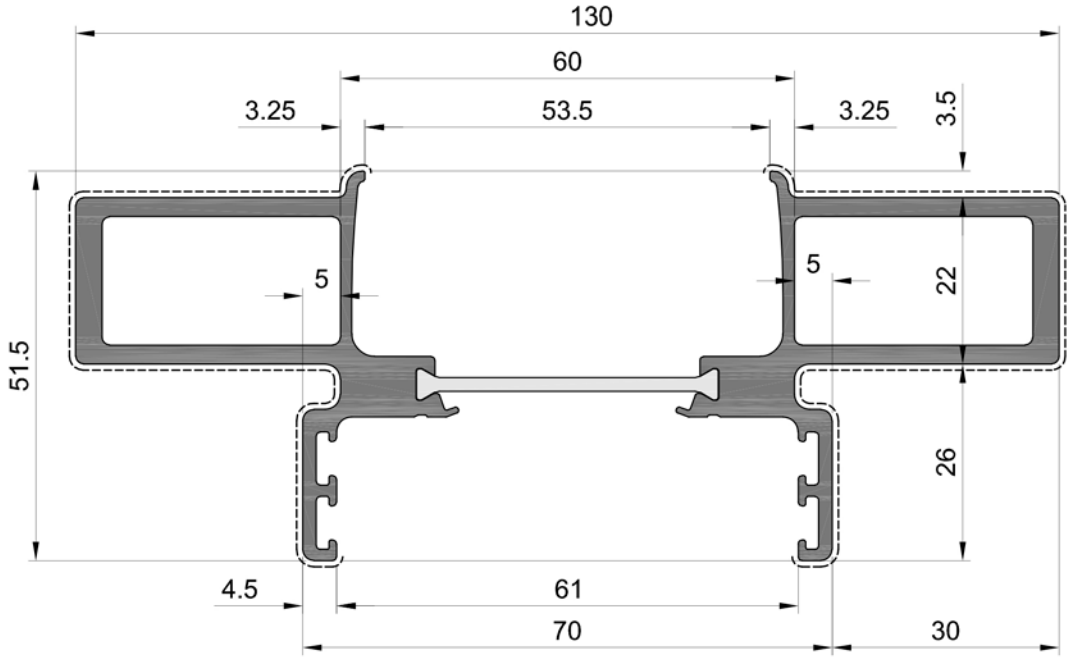

D9V034
TGD1209

dm²/m	44.77	-	-		-	-		-	-			186
dm²/m	25.89	-	-		-	-		-	-			128
Iyy cm⁴	12.95	-	-		-	-		-	-		m	7.0
mm	**800**	**1000**	**1200**	**1400**	**1600**	**1800**	**2000**	**2200**	**2400**	**2600**	**2800**	**3000**
Ixx cm⁴	31.39	37.61	44.45	51.61	58.86	66.00	72.89	79.42	85.56	91.26	96.52	101.36

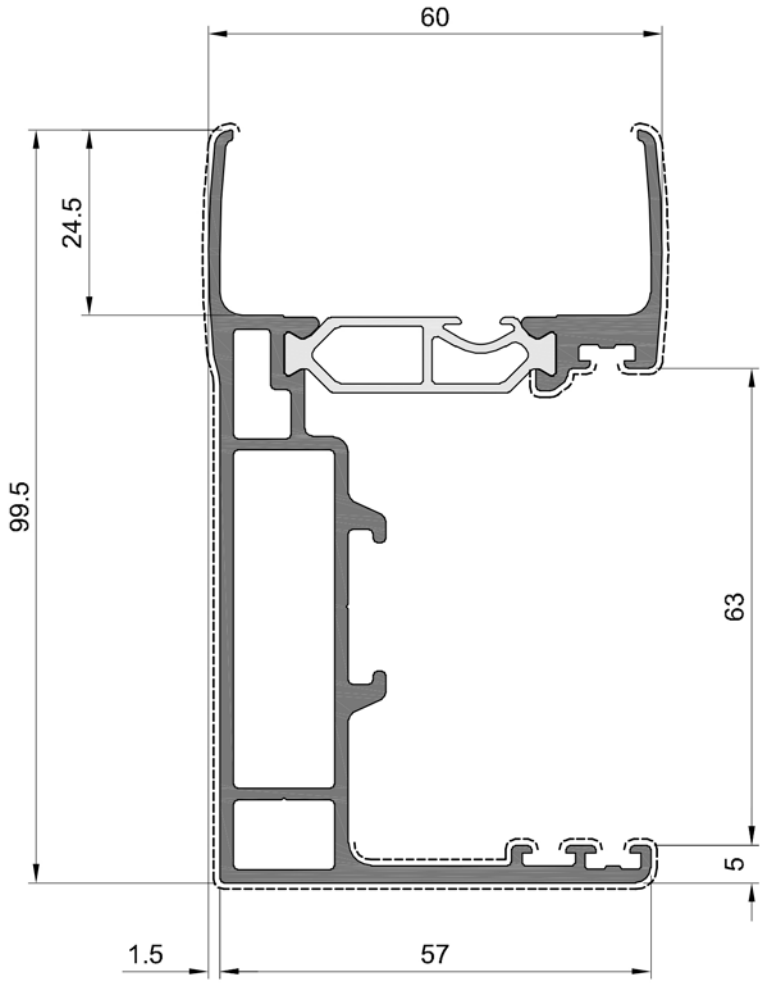

D9C001
TGD1210

dm²/m	45.99	-	-		-	-		-	-			236
dm²/m	24.72	-	-		-	-		-	-			131
Iyy cm⁴	45.93	-	-		-	-		-	-		m	7.0
mm	**800**	**1000**	**1200**	**1400**	**1600**	**1800**	**2000**	**2200**	**2400**	**2600**	**2800**	**3000**
Ixx cm⁴	-	16.27	17.81	19.18	20.37	21.36	22.19	22.87	23.44	23.91	24.30	24.91

System Profiles

Additional profiles

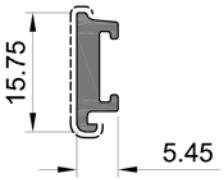

D8C003

TGD2404

dm²/m	5.08	-	-		-	-		-	-			197
dm²/m	2.01	-	-		-	-		-	-			111
Iyy cm⁴	0.10	-	-		-	-		-	-		m	7.0
mm	**800**	**1000**	**1200**	**1400**	**1600**	**1800**	**2000**	**2200**	**2400**	**2600**	**2800**	**3000**
Ixx cm⁴	-	0.01	-	-	-	-	-	-	-	-	-	-

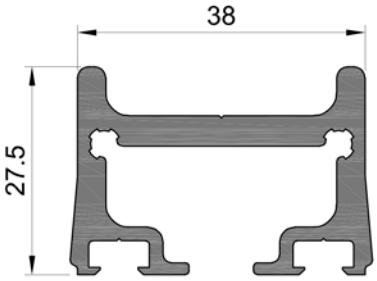

D8C005

dm²/m	25.64	-	-		-	-		-	-			238
dm²/m	0.00	-	-		-	-		-	-			113
Iyy cm⁴	2.12	-	-		-	-		-	-		m	7.0
mm	**800**	**1000**	**1200**	**1400**	**1600**	**1800**	**2000**	**2200**	**2400**	**2600**	**2800**	**3000**
Ixx cm⁴	-	7.13	-	-	-	-	-	-	-	-	-	-

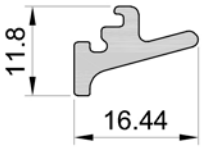

KU0004
PA (black)
TGD4002

dm²/m	-	-	-		-		-	-	-			198
dm²/m	-	-	-		-		-	-	-			-
Iyy cm⁴	-	-	-		-		-	-	-		m	7.0
mm	**800**	**1000**	**1200**	**1400**	**1600**	**1800**	**2000**	**2200**	**2400**	**2600**	**2800**	**3000**
Ixx cm⁴	-	-	-	-	-	-	-	-	-	-	-	-

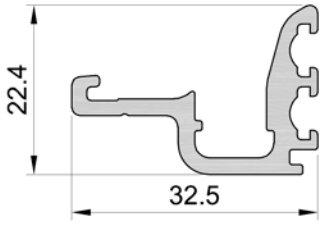

KU0012
PA (black)
TGD4004

dm²/m	-	-	-		-		-	-	-			195
dm²/m	-	-	-		-		-	-	-			117
Iyy cm⁴	-	-	-		-		-	-	-		m	7.0
mm	**800**	**1000**	**1200**	**1400**	**1600**	**1800**	**2000**	**2200**	**2400**	**2600**	**2800**	**3000**
Ixx cm⁴	-	-	-	-	-	-	-	-	-	-	-	-

System Profiles

Insulation profile and finishing profile

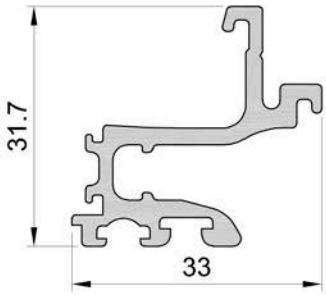

KU0013
PA (black)

TGD4001

dm²/m	-	-	-		-	-		-	-			197
dm²/m	-	-	-		-	-		-	-			111
Iyy cm⁴	-	-	-		-	-		-	-		m	7.0
mm	**800**	**1000**	**1200**	**1400**	**1600**	**1800**	**2000**	**2200**	**2400**	**2600**	**2800**	**3000**
Ixx cm⁴	-	-	-	-	-	-	-	-	-	-	-	-

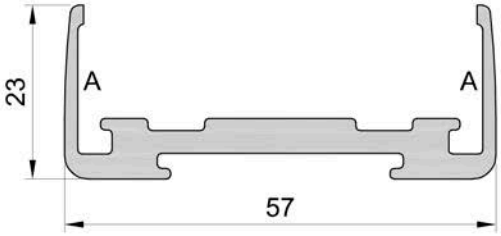

KU0015
PA (black)

TGD4005

dm²/m	-	A	HV4K05 / TGD3606		-	-		-	-			198
dm²/m	-	-	-		-	-		-	-			89
Iyy cm⁴	-	-	-		-	-		-	-		m	7.0
mm	**800**	**1000**	**1200**	**1400**	**1600**	**1800**	**2000**	**2200**	**2400**	**2600**	**2800**	**3000**
Ixx cm⁴	-	-	-	-	-	-	-	-	-	-	-	-

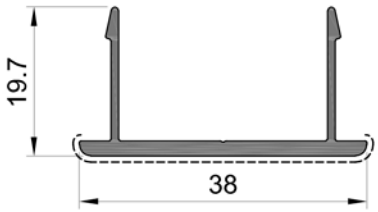

D8A005
TGD2400

dm²/m	14.95	-	-		-	-		-	-			196
dm²/m	4.09	-	-		-	-		-	-			107
Iyy cm⁴	0.37	-	-		-	-		-	-		m	7.0
mm	**800**	**1000**	**1200**	**1400**	**1600**	**1800**	**2000**	**2200**	**2400**	**2600**	**2800**	**3000**
Ixx cm⁴	-	1.67	-	-	-	-	-	-	-	-	-	-

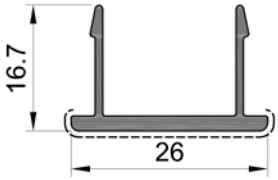

D8A006
TGD2403

dm²/m	11.37	-	-		-	-		-	-			200
dm²/m	2.94	-	-		-	-		-	-			-
Iyy cm⁴	0.21	-	-		-	-		-	-		m	7.0
mm	**800**	**1000**	**1200**	**1400**	**1600**	**1800**	**2000**	**2200**	**2400**	**2600**	**2800**	**3000**
Ixx cm⁴	-	0.57	-	-	-	-	-	-	-	-	-	-

System Profiles

Cover profile

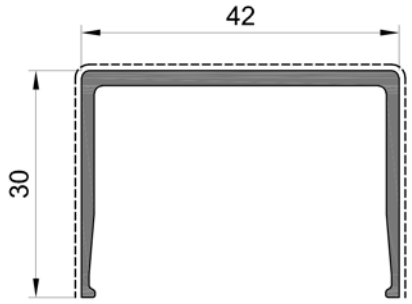

D8A013

dm²/m	19.91	-	-		-	-		-	-			238
dm²/m	10.11	-	-		-	-		-	-			113
Iyy cm⁴	1.40	-	-		-	-		-	-		m	7.0
mm	**800**	**1000**	**1200**	**1400**	**1600**	**1800**	**2000**	**2200**	**2400**	**2600**	**2800**	**3000**
Ixx cm⁴	-	4.79	-	-	-	-	-	-	-	-	-	-

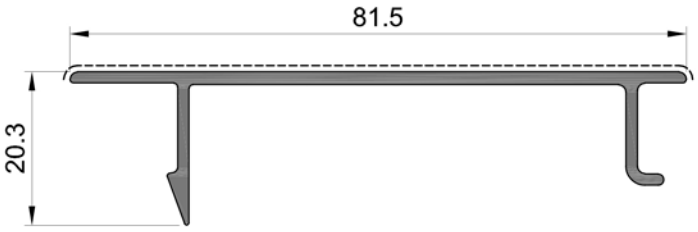

D9A050

TGD2401

dm²/m	23.27	-	-		-	-		-	-			-
dm²/m	8.42	-	-		-	-		-	-			87
Iyy cm⁴	0.46	-	-		-	-		-	-		m	7.0
mm	**800**	**1000**	**1200**	**1400**	**1600**	**1800**	**2000**	**2200**	**2400**	**2600**	**2800**	**3000**
Ixx cm⁴	-	11.88	-	-	-	-	-	-	-	-	-	-

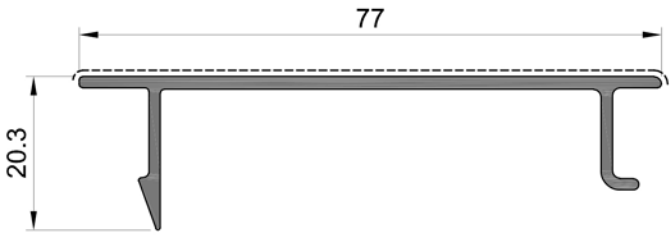

D9A051
TGD2402

dm²/m	22.39	-	-		-	-		-	-			-
dm²/m	7.99	-	-		-	-		-	-			116
Iyy cm⁴	0.46	-	-		-	-		-	-		m	7.0
mm	**800**	**1000**	**1200**	**1400**	**1600**	**1800**	**2000**	**2200**	**2400**	**2600**	**2800**	**3000**
Ixx cm⁴	-	10.94	-	-	-	-	-	-	-	-	-	-

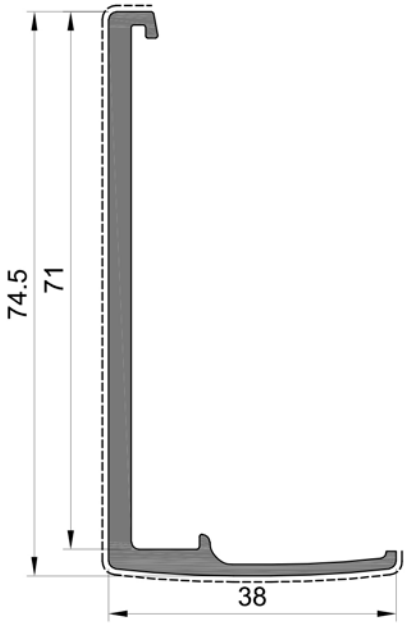

D9V112
TGD2209

dm²/m	23.53	-	-		-	-		-	-			-
dm²/m	11.84	-	-		-	-		-	-			-
Iyy cm⁴	18.85	-	-		-	-		-	-		m	7.0
mm	**800**	**1000**	**1200**	**1400**	**1600**	**1800**	**2000**	**2200**	**2400**	**2600**	**2800**	**3000**
Ixx cm⁴	-	2.24	-	-	-	-	-	-	-	-	-	-

System Profiles

Cover profile

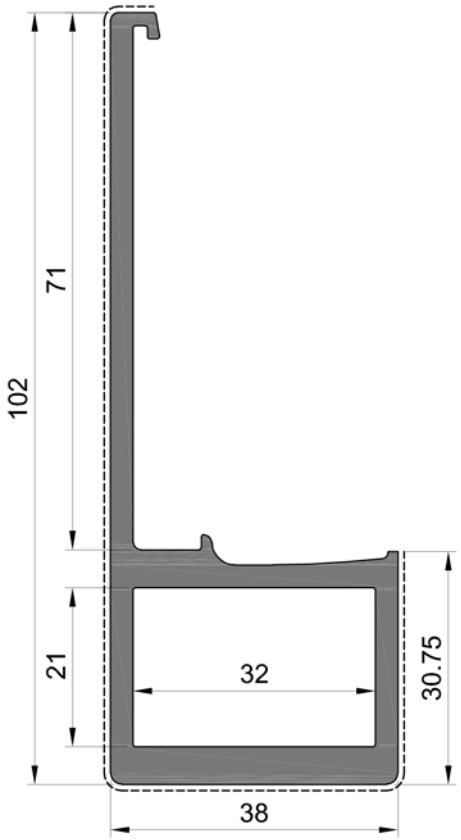

D9V113
TGD2200

dm²/m	29.17	-	-		-	-		-	-			196
dm²/m	17.47	-	-		-	-		-	-			95
Iyy cm⁴	58.58	-	-		-	-		-	-		m	7.0
mm	**800**	**1000**	**1200**	**1400**	**1600**	**1800**	**2000**	**2200**	**2400**	**2600**	**2800**	**3000**
Ixx cm⁴	-	12.39	-	-	-	-	-	-	-	-	-	-

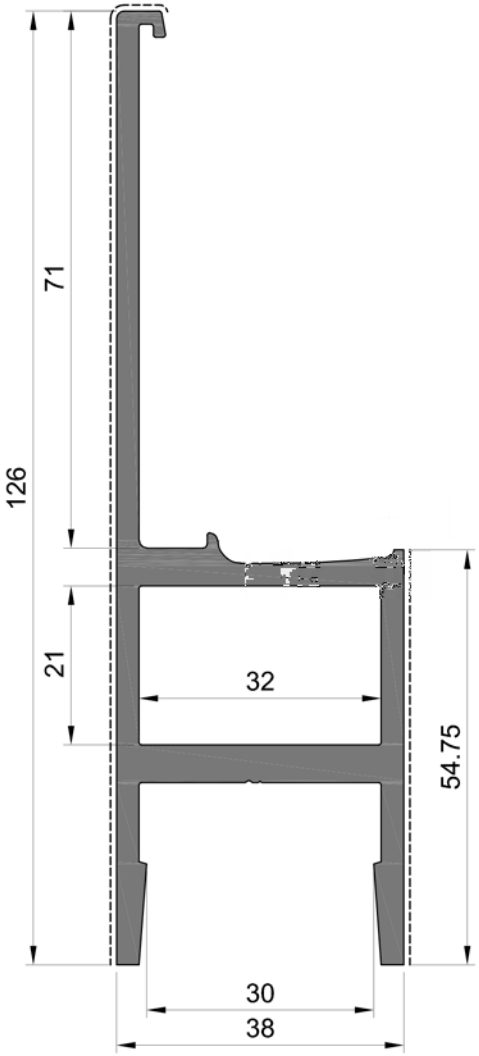

D9V116
TGD2201

dm²/m	39.07	-	-		-	-		-	-			196
dm²/m	18.64	-	-		-	-		-	-			-
Iyy cm⁴	83.87	-	-		-	-		-	-		m	7.0
mm	**800**	**1000**	**1200**	**1400**	**1600**	**1800**	**2000**	**2200**	**2400**	**2600**	**2800**	**3000**
Ixx cm⁴	-	17.64	-	-	-	-	-	-	-	-	-	-

System Profiles

Cover profile

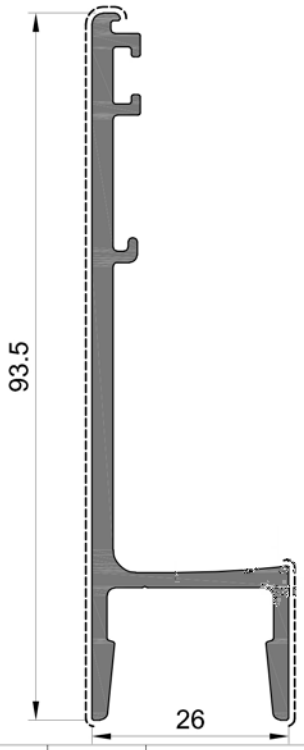

D9V117
TGD2206

dm²/m	30.10	-	-		-	-		-	-			199
dm²/m	11.78	-	-		-	-		-	-			-
Iyy cm⁴	29.29	-	-		-	-		-	-		m	7.0
mm	**800**	**1000**	**1200**	**1400**	**1600**	**1800**	**2000**	**2200**	**2400**	**2600**	**2800**	**3000**
Ixx cm⁴	-	2.65	-	-	-	-	-	-	-	-	-	-

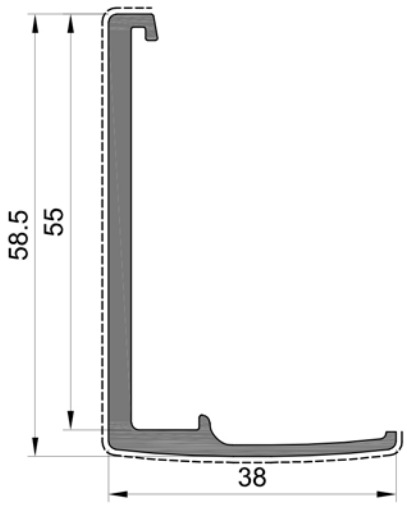

D9V118

dm²/m	20.33	-	-		-	-		-	-			-
dm²/m	10.28	-	-		-	-		-	-			-
Iyy cm⁴	9.93	-	-		-	-		-	-		m	7.0
mm	**800**	**1000**	**1200**	**1400**	**1600**	**1800**	**2000**	**2200**	**2400**	**2600**	**2800**	**3000**
Ixx cm⁴	-	2.14	-	-	-	-	-	-	-	-	-	-

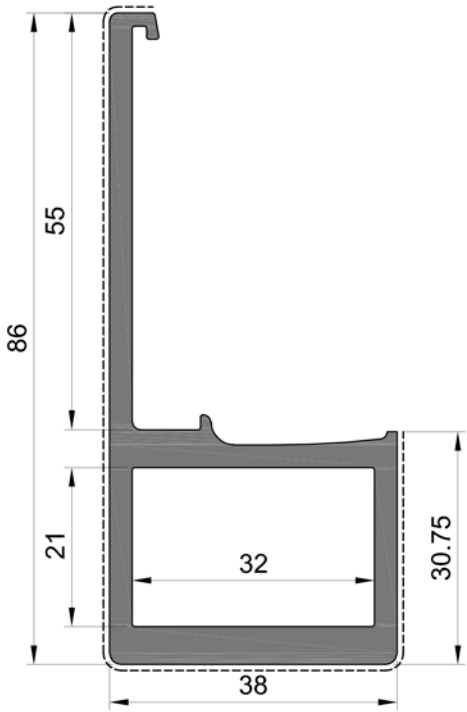

D9V119
TGD2202

dm²/m	25.97	-	-		-	-		-	-			196
dm²/m	15.87	-	-		-	-		-	-			112
Iyy cm⁴	36.66	-	-		-	-		-	-		m	7.0
mm	**800**	**1000**	**1200**	**1400**	**1600**	**1800**	**2000**	**2200**	**2400**	**2600**	**2800**	**3000**
Ixx cm⁴	-	11.70	-	-	-	-	-	-	-	-	-	-

System Profiles

Cover profile

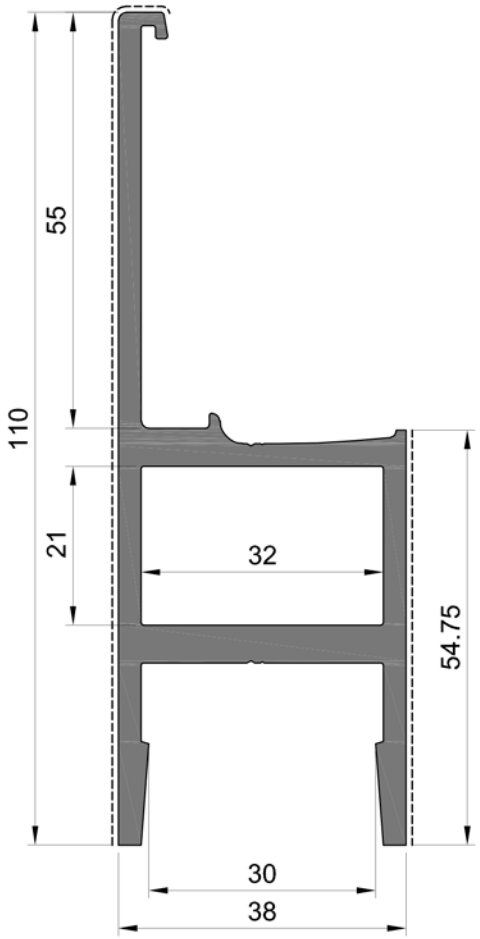

D9V120

TGD2203

dm²/m	35.87	-	-		-	-		-	-			196
dm²/m	17.04	-	-		-	-		-	-			-
Iyy cm⁴	56.50	-	-		-	-		-	-		m	7.0
mm	**800**	**1000**	**1200**	**1400**	**1600**	**1800**	**2000**	**2200**	**2400**	**2600**	**2800**	**3000**
Ixx cm⁴	-	16.82	-	-	-	-	-	-	-	-	-	-

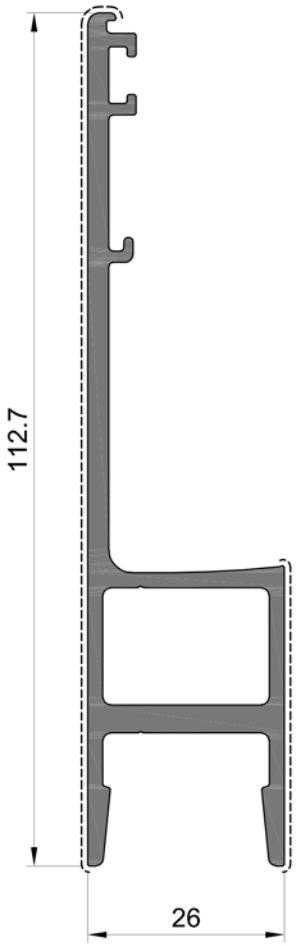

D9V125
TGD2207

dm²/m	33.94	-	-		-	-		-	-			200
dm²/m	15.62	-	-		-	-		-	-			-
Iyy cm⁴	54.39	-	-		-	-		-	-		m	7.0
mm	**800**	**1000**	**1200**	**1400**	**1600**	**1800**	**2000**	**2200**	**2400**	**2600**	**2800**	**3000**
Ixx cm⁴	-	4.64	-	-	-	-	-	-	-	-	-	-

System Profiles

Cover profile

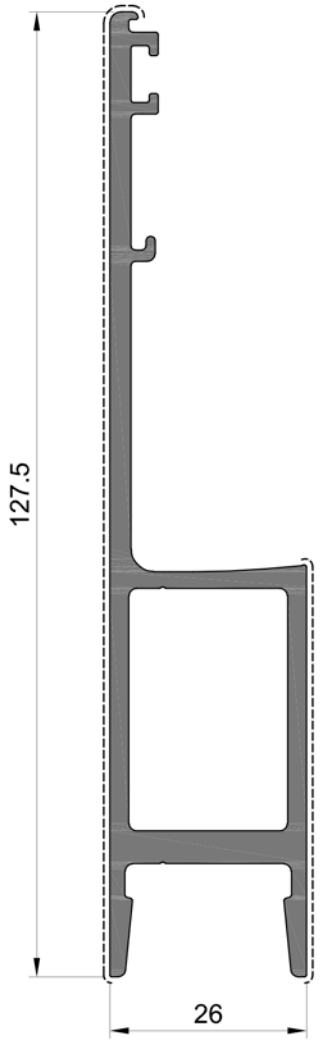

D9V126

TGD2208

dm²/m	36.40	-	-		-	-		-	-			200
dm²/m	18.58	-	-		-	-		-	-			-
Iyy cm⁴	81.85	-	-		-	-		-	-		m	7.0
mm	**800**	**1000**	**1200**	**1400**	**1600**	**1800**	**2000**	**2200**	**2400**	**2600**	**2800**	**3000**
Ixx cm⁴	-	6.14	-	-	-	-	-	-	-	-	-	-

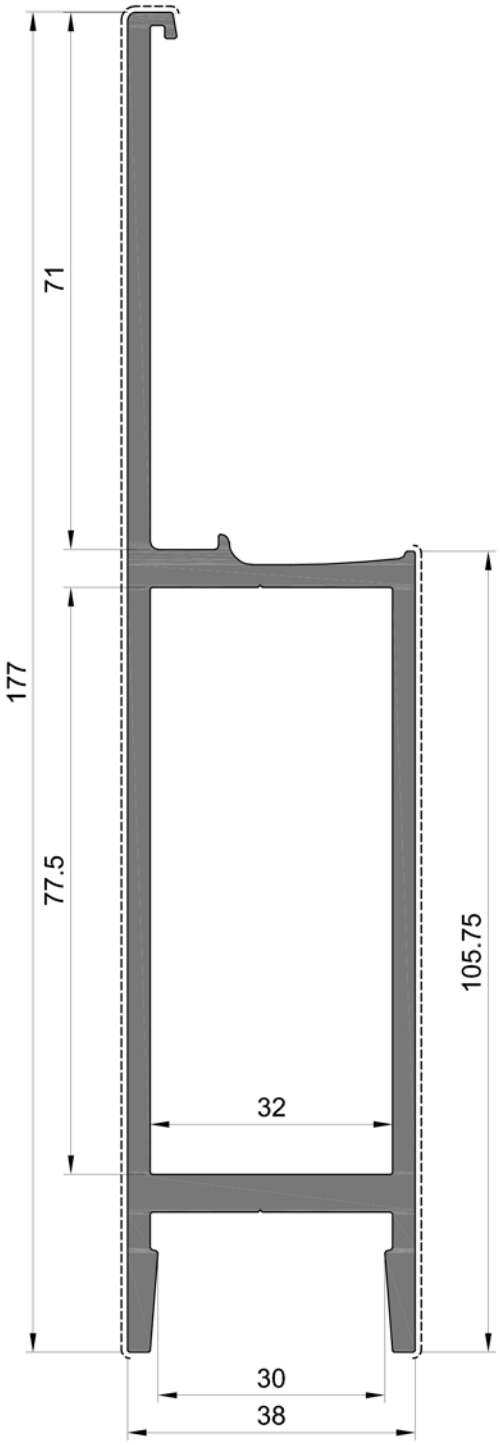

D9V139
TGD2204

dm²/m	48.07	-	-		-	-		-	-			196
dm²/m	28.89	-	-		-	-		-	-			-
Iyy cm⁴	261.37	-	-		-	-		-	-		m	7.0
mm	**800**	**1000**	**1200**	**1400**	**1600**	**1800**	**2000**	**2200**	**2400**	**2600**	**2800**	**3000**
Ixx cm⁴	-	27.56	-	-	-	-	-	-	-	-	-	-

System Profiles

Cover profile

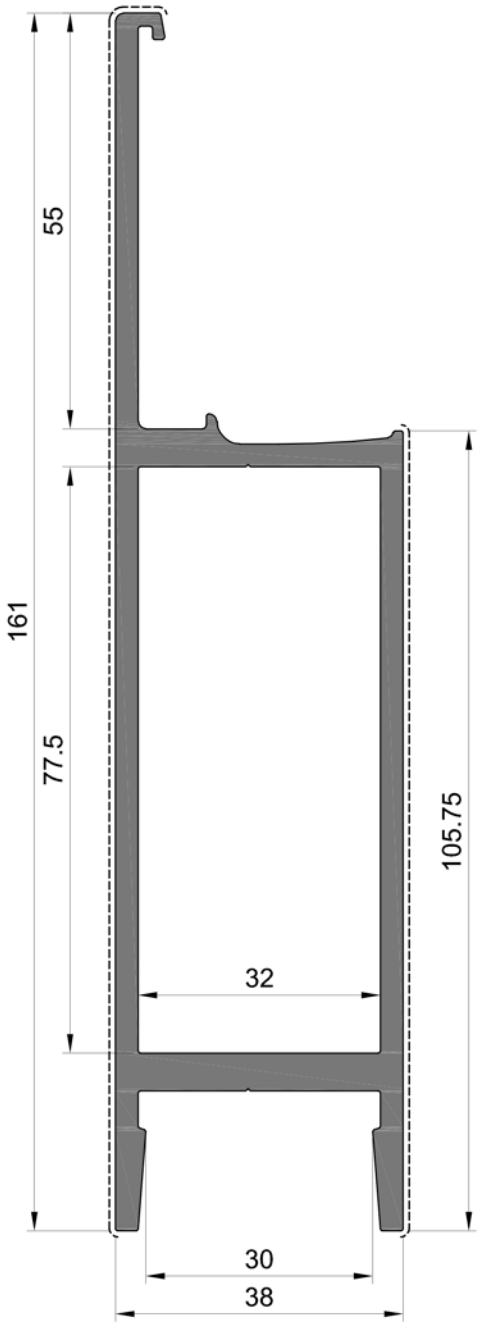

D9V140
TGD2205

dm²/m	44.87	-	-		-	-		-	-			196
dm²/m	27.29	-	-		-	-		-	-			-
Iyy cm⁴	210.18	-	-		-	-		-	-		m	7.0
mm	**800**	**1000**	**1200**	**1400**	**1600**	**1800**	**2000**	**2200**	**2400**	**2600**	**2800**	**3000**
Ixx cm⁴	-	26.58	-	-	-	-	-	-	-	-	-	-

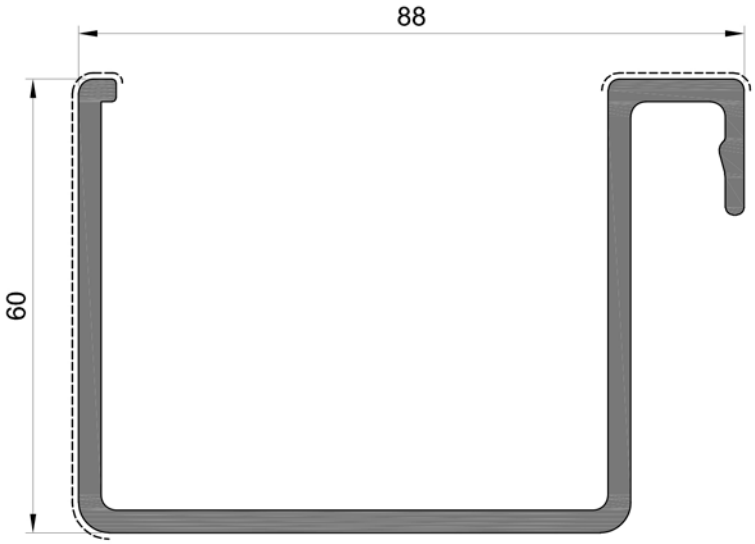

D8A002
TGD2500

dm²/m	43.41	-	-		-	-		-	-			241
dm²/m	8.64	-	-		-	-		-	-			137
Iyy cm⁴	30.61	-	-		-	-		-	-		m	7.0
mm	**800**	**1000**	**1200**	**1400**	**1600**	**1800**	**2000**	**2200**	**2400**	**2600**	**2800**	**3000**
Ixx cm⁴	-	68.04	-	-	-	-	-	-	-	-	-	-

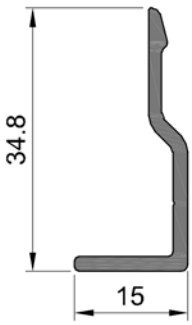

D8A003
TGD2501

dm²/m	10.05	-	-		-	-		-	-			241
dm²/m	0.00	-	-		-	-		-	-			137
Iyy cm⁴	1.15	-	-		-	-		-	-		m	7.0
mm	**800**	**1000**	**1200**	**1400**	**1600**	**1800**	**2000**	**2200**	**2400**	**2600**	**2800**	**3000**
Ixx cm⁴	-	0.12	-	-	-	-	-	-	-	-	-	-

System Profiles

Gutter and bracket

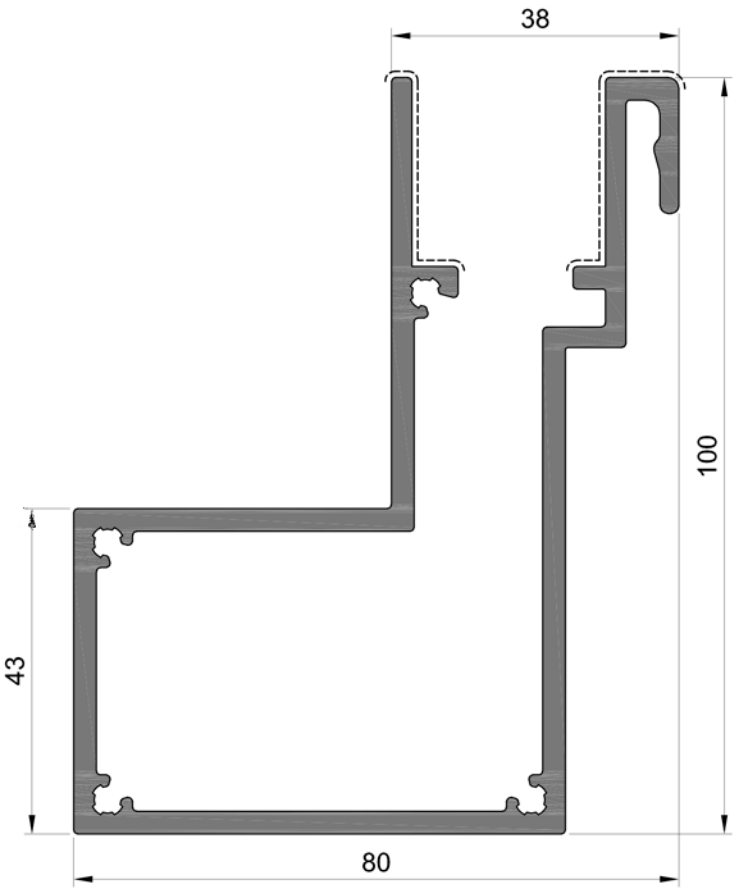

D8A014

TGD2502

dm²/m	71.30	-	-		-	-		-	-			243
dm²/m	7.41	-	-		-	-		-	-			-
Iyy cm⁴	100.13	-	-		-	-		-	-		m	7.0
mm	**800**	**1000**	**1200**	**1400**	**1600**	**1800**	**2000**	**2200**	**2400**	**2600**	**2800**	**3000**
Ixx cm⁴	-	62.25	-	-	-	-	-	-	-	-	-	-

		Ixx (cm⁴)											
		Length [mm]											
		800	1000	1200	1400	1600	1800	2000	2200	2400	2600	2800	3000
D9K025	TGD1100	93.06	108.94	125.67	142.41	158.59	173.82	187.91	200.75	212.37	222.81	232.16	240.51
D9K029	TGD1101	119.21	140.34	163.20	186.73	210.11	232.73	254.18	274.22	292.74	309.72	325.19	339.25
D9K035	TGD1102	177.30	221.62	265.95	310.27	354.59	398.92	443.24	487.56	531.89	576.21	620.54	664.86
D9K039	TGD1103	252	315	378	441	504	567	630	693	756	819	882	945
D9T001		101.80	109.66	116.25	121.59	125.88	129.30	132.04	134.26	136.07	137.55	138.78	139.81
D9V004	TGD1200	3.66	4.78	5.76	6.58	7.26	7.81	8.27	8.64	8.95	9.21	9.42	9.60
D9V005	TGD1201	3.41	4.40	5.26	5.96	6.54	7.01	7.38	7.69	7.95	8.15	8.33	8.47
D9V007	TGD1202	9.39	11.83	14.34	16.80	19.12	21.27	23.21	24.96	26.51	27.89	29.11	30.19
D9V008	TGD1203	14.20	17.42	20.83	24.26	27.58	30.73	33.64	36.31	38.74	40.92	42.88	44.63
D9V010	TGD1204	15.14	19.26	23.01	26.27	29.04	31.36	33.30	34.92	36.27	37.41	38.37	39.18
D9V011	TGD1205	14.10	17.79	21.68	25.56	29.31	32.84	36.10	39.07	41.76	44.17	46.33	48.26
D9V031	TGD1206	23.83	28.18	32.87	37.69	42.46	47.07	51.43	55.49	59.23	62.66	65.78	68.61
D9V032	TGD1207	33.80	39.52	45.82	52.45	59.16	65.80	72.22	78.33	84.08	89.44	94.39	98.96
D9V033	TGD1208	22.59	27.42	32.62	37.94	43.19	48.23	52.99	57.40	61.46	65.16	68.52	71.56
D9V034	TGD1209	31.39	37.61	44.45	51.61	58.86	66.00	72.89	79.42	85.56	91.26	96.52	101.36

Glazing

IMPORTANT NOTICE

- The thickness of the glass depends on:
  - the dynamic basic wind pressure
  - the characteristics of the glazing, its dimensions and its application
  - the application
  - the position
- The glazing and its installation must comply with the valid directives and the specifications of the authorised processor (insulated glass should have a technical licence).
- Before the installation of the glazing check thickness, dimensions and geometry of the volumes with the directives and specification.

Glazing table with CO0237 / TGD4006

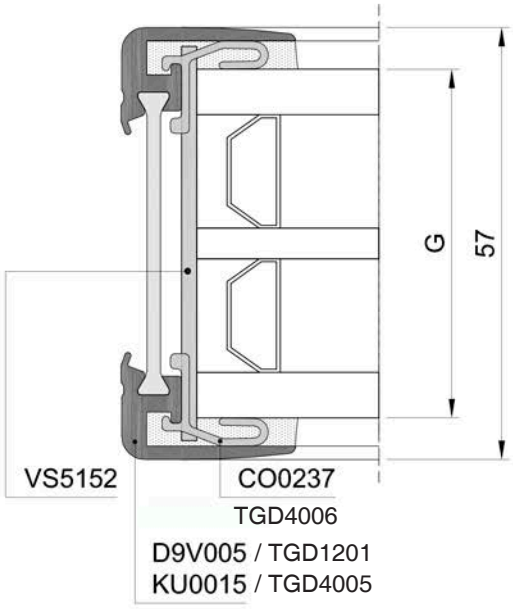

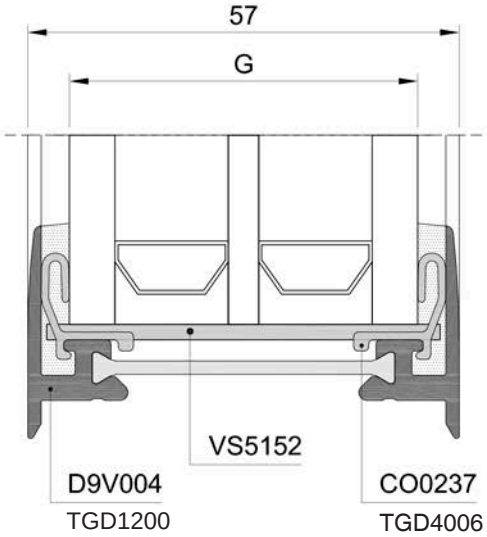

BOTTOM	SIDE + TOP	HOLDER	G (MM)
D9V004 TGD1200	D9V005 TGD1201	CO0237 TGD4006	40 → 46

Glazing

Glazing table

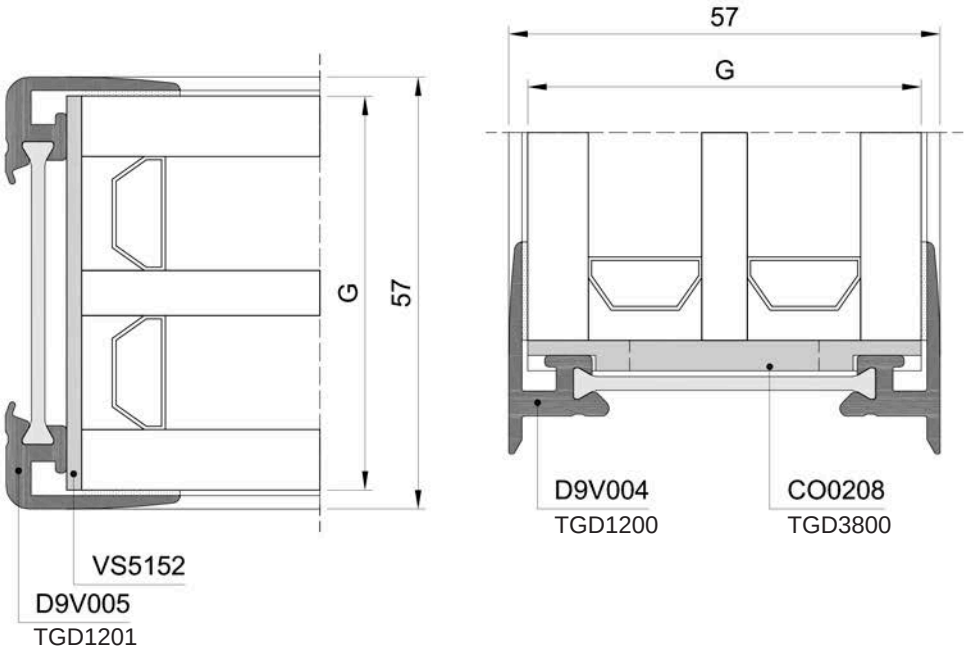

BOTTOM	SIDE + TOP	G (MM)
D9V004 TGD1200	D9V005 TGD1201	47 → 52

Glazing table with KU0015 / TGD4005

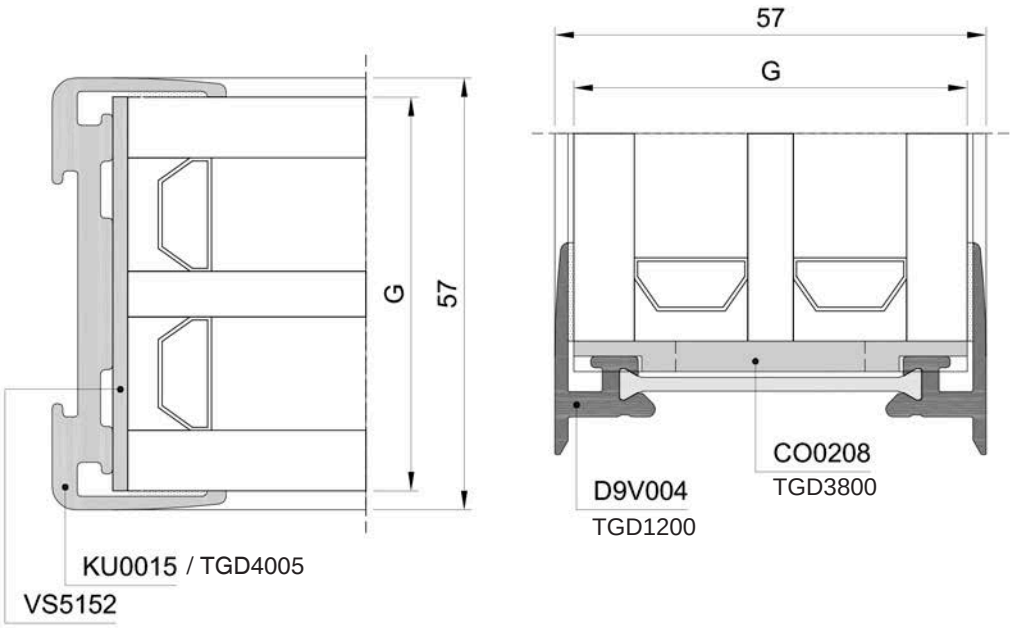

BOTTOM	SIDE + TOP	G (MM)
D9V004 TGD1200	KU0015 TGD4005	47 → 52

Accessories

DRAWING	NO	 H x W (MM)	PROFILES				TO BE ORDERED SEPARATELY
	***CO0153*** TGD3600	15 x 4.8	D9K025 TGD1100	-	-	-	-
			D9K029 TGD1101	-	-	-	
			D9K035 TGD1102	-	-	-	
			D9K039 TGD1103	-	-	-	
			-	-	-	-	
			-	-	-	-	
			-	-	-	-	

Accessories

Cleats - Cleats for eccentrics

Drawing	No	H x W (mm)	Profiles					To be ordered separately
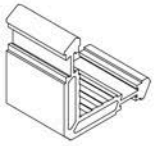	***HV9M15*** TGD3601	11.9 x 43.2	D9K035	TGD1102	-	-	-	2 x 778-500 TGD3702
			D9K039	TGD1103	-	-	-	
			-	-	-	-	-	
			-	-	-	-	-	
			-	-	-	-	-	
			-	-	-	-	-	
			-	-	-	-	-	
	***HV9M16*** TGD3602	11.9 x 31.7	D9K025	TGD1100	-	-	-	2 x 778-500 TGD3702
			D9K029	TGD1101	-	-	-	
			D9K035	TGD1102	-	-	-	
			D9K039	TGD1103	-	-	-	
			-	-	-	-	-	
			-	-	-	-	-	
			-	-	-	-	-	
	***HV9M17*** TGD3603	11.9 x 17.2	D9K025	TGD1100	-	-	-	2 x 778-500 TGD3702
			D9K029	TGD1101	-	-	-	
			D9K035	TGD1102	-	-	-	
			D9K039	TGD1103	-	-	-	
			-	-	-	-	-	
			-	-	-	-	-	
			-	-	-	-	-	

Drawing	No	 H x W (mm)	Profiles					To be ordered separately
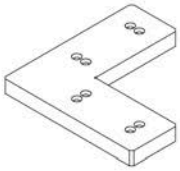	***HV9N01*** TGD3604	12 x 43	D9K035 D9K039 - - - - -	TGD1102 TGD1103 - - - - -	- - - - - - -	- - - - - - -	- - - - - - -	4 x SCZ828
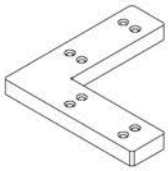	***HV9N03*** TGD3605	12 x 31.5	D9K025 D9K029 D9K035 D9K039 - - -	TGD1100 TGD1101 TGD1102 TGD1103 - - -	- - - - - - -	- - - - - - -	- - - - - - -	4 x SCZ828

Accessories

Cleats - Accessories

DRAWING	NO	(MM)	DESCRIPTION	APPLICATION
	***778-500*** TGD3702		Zamac eccentric	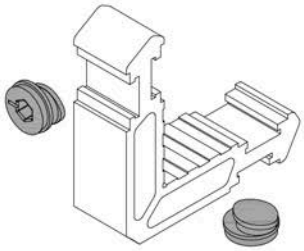
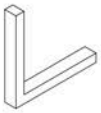	***HV4K05*** TGD3606		Corner cleat for D9V004, D9V005, KU0015 Corner cleat for TGD1200, TGD1201, TGD4005	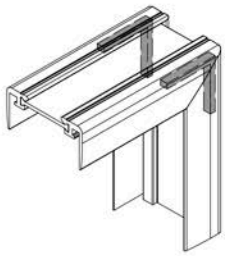
	***HV4M12*** TGD3607		Stainless steel levelling corner height 30 mm	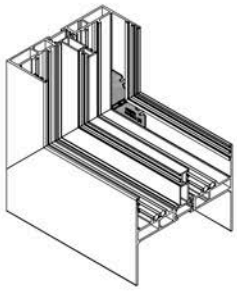

DRAWING	NO	(MM)	DESCRIPTION	APPLICATION
	***52R225***	2.5	EPDM glazing gasket inside, in black	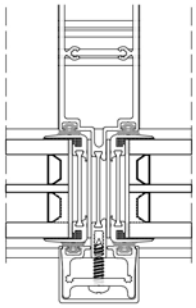
	***RU0105*** TGD5001		EPDM sealing gasket interlock KU0013 (TGD4001), in black	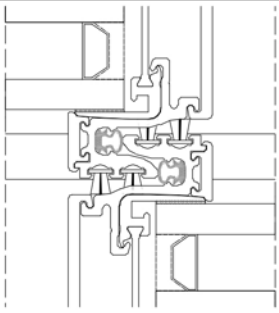
	***RU9121*** TGD5002		EPDM sealing gasket interlock KU0012(TGD4004), in black	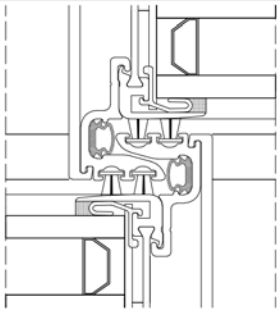
	***RU9152*** TGD5003		EPDM rebate gasket, in black	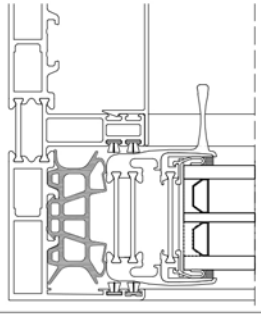

Accessories

Gaskets - System gaskets

DRAWING	NO	(MM)	DESCRIPTION	APPLICATION
	***RU9153*** TGD5004		EPDM sealing gasket, 4-vents, in black	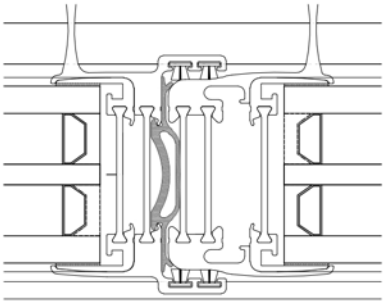
	***RU9154*** TGD5005		EPDM gasket for rail, in black	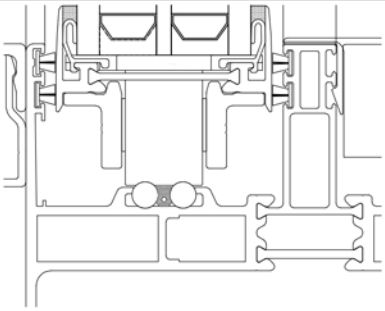

DRAWING	NO	(MM)	DESCRIPTION	APPLICATION
	***MD0406*** TGD5006	4.25	Brush gasket	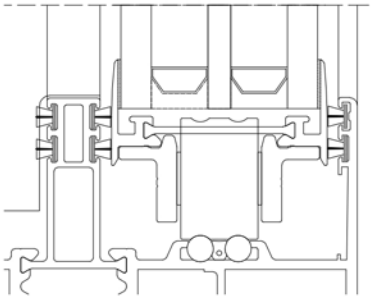
	***MD0408*** TGD5007	5.5	Brush gasket for coated profiles	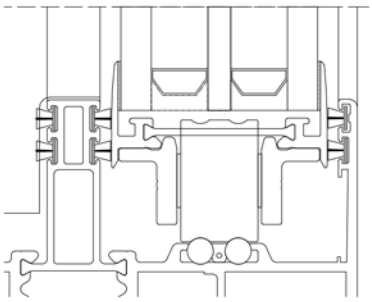
	***MD0410*** TGD5008	6.5	Brush gasket for anodised profiles	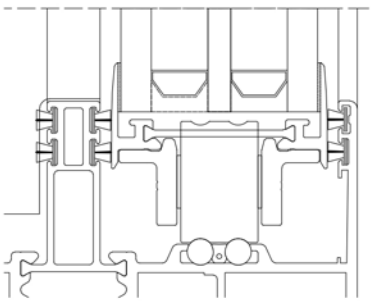

Accessories

Accessories - Window

DRAWING	NO	(MM)	DESCRIPTION	APPLICATION
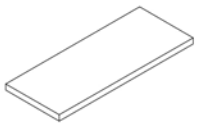	***93082*** TGD3816	40x2x100 Blue	PP glazing packer, 40 mm	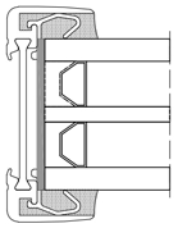
	93083 TGD3817	40x3x100 Red		
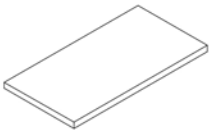	***VS5152***	52x2x100 Blue	PP glazing packer, 52 mm	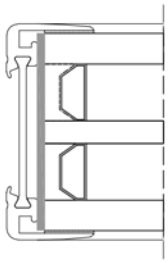
	VS5153	52x3x100 Red		

DRAWING	NO	(MM)	DESCRIPTION	APPLICATION
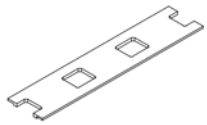	***CO0208*** TGD3800		Glass support	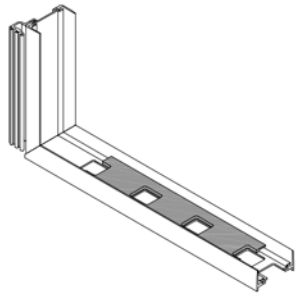
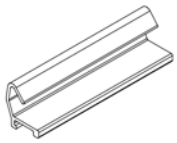	***CO0237*** TGD4006		Glass holder, L = 50 mm	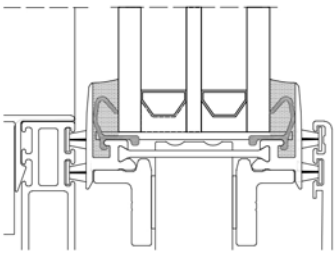
	***VS0104*** TGD3801		Drainage capping	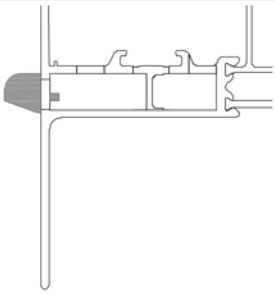
	***85Z001***		Washer, Ø4.8 mm	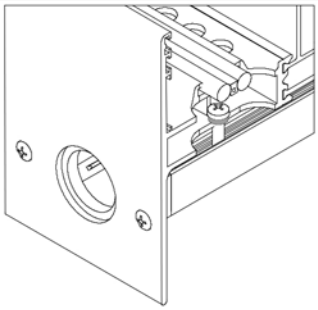
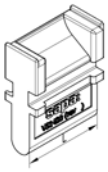	***VS1420*** TGD3809	38	Central sealing piece, frame, bottom	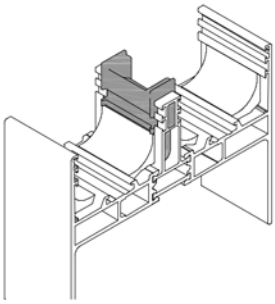

Accessories

Accessories - System accessories

DRAWING	NO	(MM)	DESCRIPTION	APPLICATION
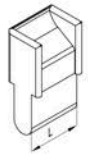	***VS1421***	26	Central sealing piece, frame, bottom	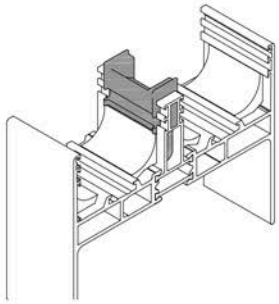
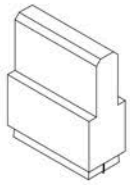	***CO1131*** TGD3810	38/26	Central sealing piece, frame, top	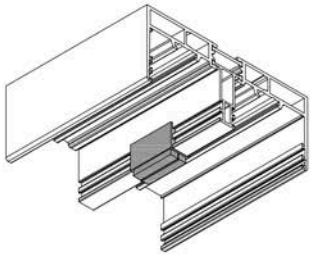
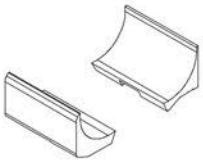	***CO0203*** TGD3608		Sealing plug (2-rail)	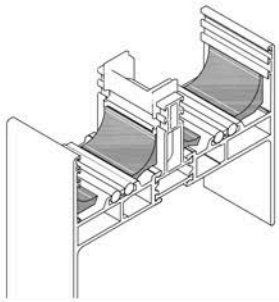
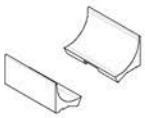	***CO0220*** TGD3609		Sealing plug (3-rail)	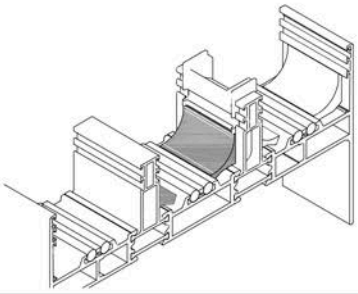
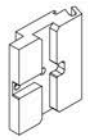	***CO0207*** TGD3804		Fixation piece for KU0012 (TGD4004) and KU0013 (TGD4001).	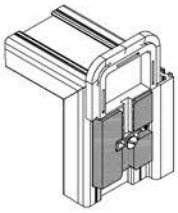

DRAWING	NO	(MM)	DESCRIPTION	APPLICATION
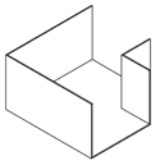	***CO0157*** TGD3609		Corner piece for gutter D8A002 (TGD2500)	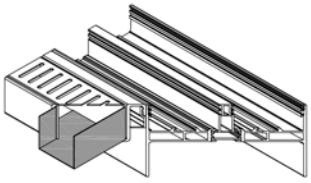
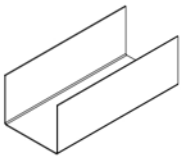	***CO1144*** TGD3617		Connection for gutter D8A002 (TGD2500)	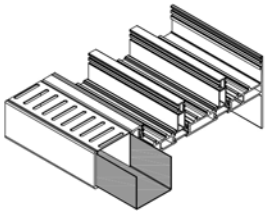
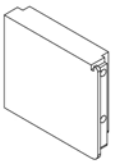	***CO0167*** TGD3615		End piece gutter D8A002, left (TGD2500)	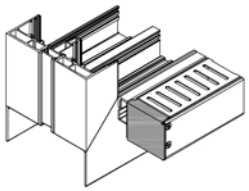
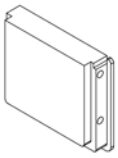	***CO0168*** TGD3616		End piece gutter D8A002, right (TGD2500)	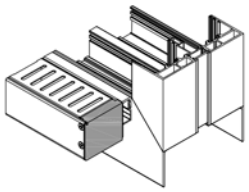
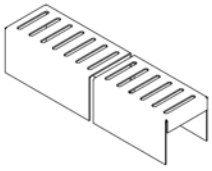	***CO0169*** TGD3701	1967	Gutter raster for gutter D8A002 (TGD2500)	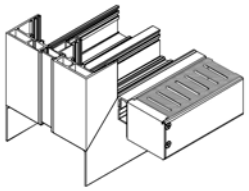

Accessories

Accessories - System accessories

DRAWING	NO	(MM)	DESCRIPTION	APPLICATION
	***CO1140*** TGD3703	Ø34	Flange for gutter drainager for D8A002 / D8A014 TGD2500 / TGD2502	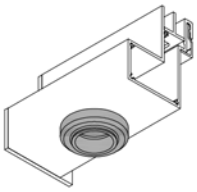
	***CO2271*** TGD3619		Cover cap for D8A014 TGD2502	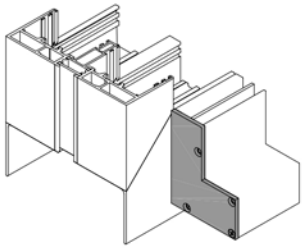
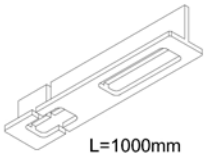	***CO2272*** TGD3620		Gutter raster for D8A014 TGD2502	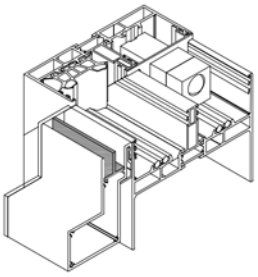
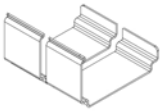	***CO2273*** TGD3621		Connection for D8A014 TGD2502	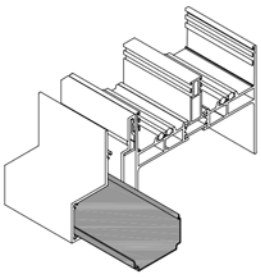
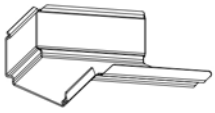	***CO2274*** TGD3622		Connection for D8A014 TGD2502	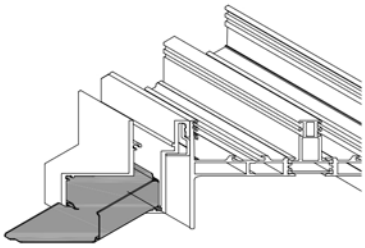

DRAWING	NO	(MM)	DESCRIPTION	APPLICATION
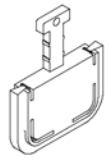	***CO0204*** TGD3805		End piece	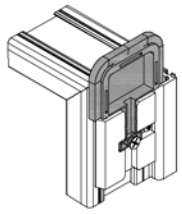
	***CO0210*** TGD3806		End piece lock side (4-vent)	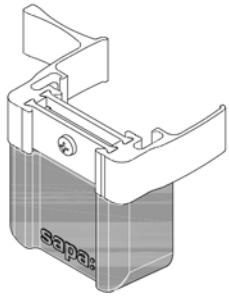
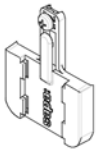	***CO0219*** TGD3807		End piece (4-vent)	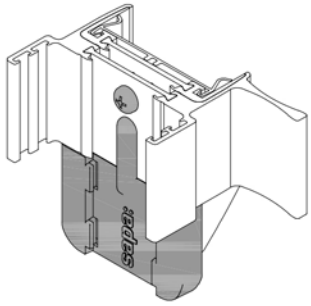
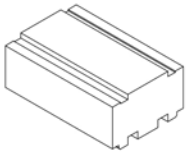	***CO0198*** TGD3808		Support block (fixed ventD8V004), L = 80 mm	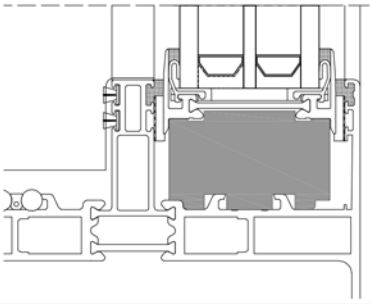
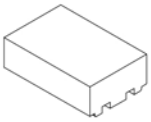	***CO2299***		Support block, underneath glass, L = 80 mm	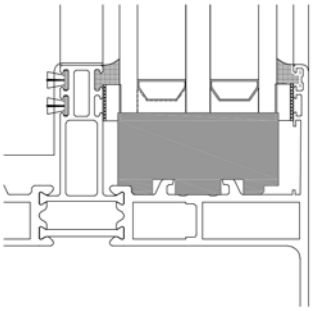

Accessories

Accessories - System accessories

DRAWING	NO	(MM)	DESCRIPTION	APPLICATION
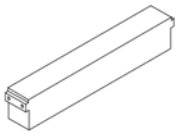	***CO0200*** TGD6000		Support piece, 3-rail	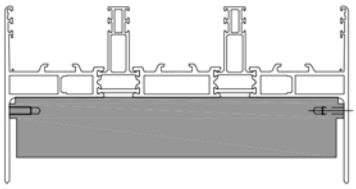
	***VS9974*** TGD3813		Sealing piece for frame	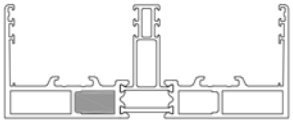
	***VS9973*** TGD3812		Sealing piece for frame	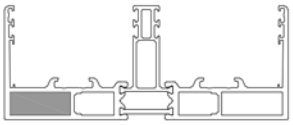
	***VS9972*** TGD3811		Sealing piece for frame	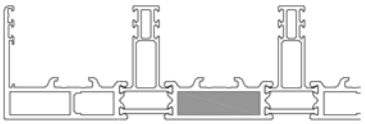
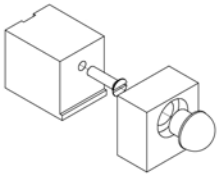	***CO0180*** TGD3610		Buffer kit	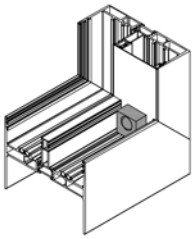

DRAWING	NO	(MM)	DESCRIPTION	APPLICATION
	***CO0159*** TGD3611		Distance piece	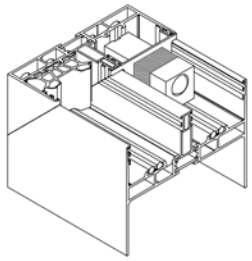
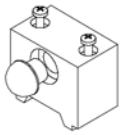	***CO0201*** TGD3612		Buffer set	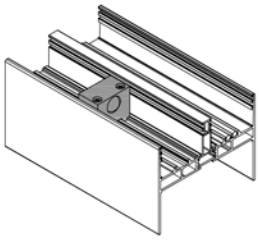
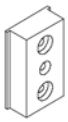	***CO0199*** TGD3814		Fixation piece for handle	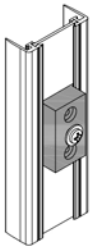
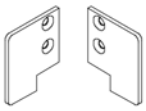	***CO0209*** TGD3623		End piece for D9C001 TGD1210	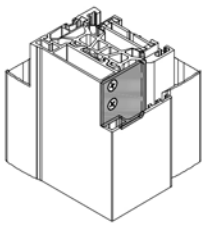
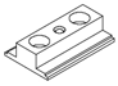	***CO0211*** TGD3815		Fixation piece (floating corner) for corner 90°	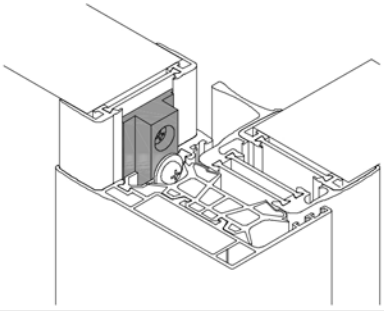

Accessories

Accessories - System accessories

Drawing	No	(mm)	Description	Application
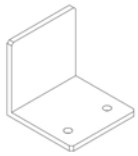	***CO2292***		Fixation piece for D9T001	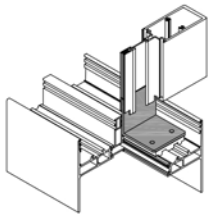
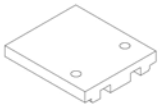	***CO2293***		Support piece for D9T001	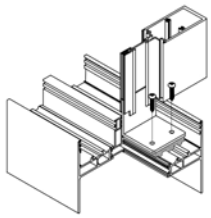
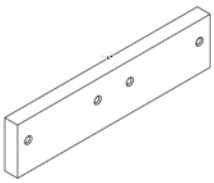	***CO1141*** TGD3613		Connection for frame	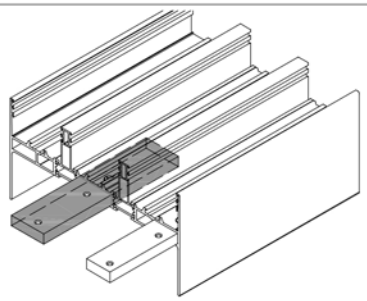
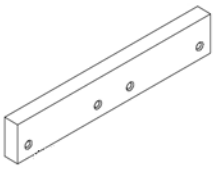	***CO1142*** TGD3614		Connection for frame	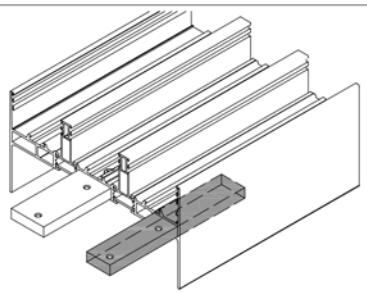

DRAWING	NO	(MM)	DESCRIPTION	APPLICATION
	***BT0007*** TGD5000		Self-adhesive foam strip	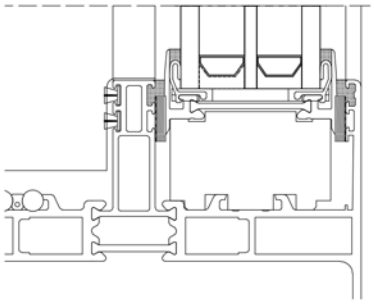
	***BT0010***		PE-strip, in black or grey	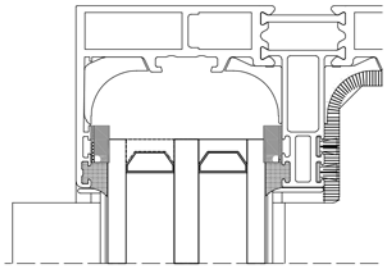

TECHNAL®

Accessories

Screws

DIN 7 - ST.ST. - A2

280-108	Ø1x6

DIN 84 - ST.ST. - A2

80Q506	M5x6
80Q509	M5x9
80Q510	M5x10
80Q516	M5x16
80Q525	M5x25
80Q530	M5x30
80Q535	M5x35
80Q608	M6x8
SCD660	M6x60

DIN 96 - ST.ST. - A2

81A120	Ø3x20

DIN 125A - ST.ST. - A2

280-203	M5
SCY600	M6

DIN 433 - ST.ST. - A2

280-216	M12

DIN 439B - ST.ST. - A2

84Z500	M5
293-306	M12

DIN 562 - ST.ST. - A2

293-302	M5

DIN 912 - ST.ST. - A2

80B516	M5x16
SCL550	M5x50
SCL560	M5x60
SCL565	M5x65
SCL570	M5x70
SCL575	M5x75
SCL585	M5x85
SCL612	M6x12
SCL614	M6x14
SCL616	M6x16
80B618	M6x18
80B625	M6,x25
80B820	M8x20
SCL845	M8x45

DIN 913 - ST.ST. - A2

80C610	M6x10
80C614	M6x14
80C630	M6x30

DIN 914 - ST.ST. - A2

80D303	M4x3
80D304	M4x4
80D306	M4x6
SCH408	M4x8
80D310	M4x10
SCH416	M4x16
80D508	M5x8
80D812	M8x12
80D814	M8x14

DIN 916 - ST.ST. - A2

702-939	M5x5
702-940	M5x8
80E510	M5x10
292-100	M5x12
80E520	M5x20
80E608	M6x8
702-933	M6x10

DIN 916 - ST.ST. - A2

SCF612	M6x12
80E620	M6x20
80E810	M8x10
80E816	M8x16
SCF820	M8x20

DIN 917 - ST.ST. - A2

293-305	M12

DIN 933 - ST.ST. - A2

80F306	M4x6
80F610	M6x10
293-007	M6x12
80F618	M6x18
80F620	M6x20
80F625	M6x25
SCG640	M6x40
702-935	M6x50
293-003	M8x25

DIN 934 - ST.ST. - A2

SCG641	M5
4G6000	M6
293-300	M8
293-307	M12

DIN 963 - ST.ST. - A2

701-529	M5x12
SCZ826	M4x8
SCZ827	M4x12
SCZ828	M5x10
SCZ829	M5x12
SCZ830	M5x16
SCZ831	M5x20
SCZ832	M5x40
SCZ833	M5x50

DIN 965 - ST.ST. - A2

80H310	M4x10
SCZ827	M4x12
291-312	M4x16
80H510	M5x10
80H520	M5x20
SCZ820	M5x22
80H525	M5x25
80H530	M5x30
80H535	M5x35
80H540	M5x40
90318	M5x45
80H560	M5x60
SCE565	M5x65
291-307	M5x70
291-311	M5x75
291-308	M5x80
291-309	M5x85
SCE590	M5x90
291-310	M5x95
SCE500	M5x100
SCE505	M5x105
SCE616	M6x16

DIN 966 - ST.ST. - A2

80I510	M5x10
80I515	M5x15
80I625	M6x25
80I630	M6x30

DIN 985 - ST.ST. - A2

293-301	M5
4T8000	M8

DIN 1481 - ST.ST. - A2

71C020	Ø2,5x16
71C017	Ø4x6
71C016	Ø4x10
280-101	Ø4x12
280-100	Ø4x24

DIN 1481 - ST.ST. - A2

280-106	Ø4,4x16
280-136	Ø4,4x18
280-102	Ø4,4x32
280-111	Ø4,4x36
280-137	Ø5x24
71C018	Ø8x10
280-140	Ø8x20
71C019	Ø8x24

DIN 1587 - ST.ST. - A2

293-303	M6

DIN 6798A - ST.ST. - A2

SCZ825	M4
SCY601	M6

DIN 6799 - ST.ST. - A2

280-211	Ø9
280-217	Ø10

DIN 7337 - ST.ST. - A2

SCZ007	Ø4x8
294-003	Ø4,8x16
294-004	Ø4,8x20

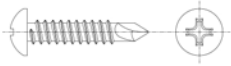

DIN 7504N - ST.ST. - A2

83K413	Ø4,2x13
290-008	Ø4,2x19
83K522	Ø4,8x22

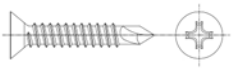

DIN 7504P - ST.ST. - A2

290-006	Ø4,2x19
290-007	Ø4,2x25

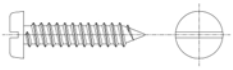

DIN 7971C - ST.ST. - A2

701-825	Ø3,9x16
701-895	Ø4,8x13

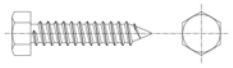

DIN 7976C - ST.ST. - A2

82J416	Ø4,2x16
82J632	Ø5,5x32
291-500	Ø6,3x50
291-501	Ø6,3x100

DIN 7981C - ST.ST. - A2

82K109	Ø2,9x9
82K216	Ø3,5x16
82K238	Ø3,5x38
SCC300	Ø3,9x9.5
82K325	Ø3,9x25
82K332	Ø3,9x32
290-107	Ø4,2x9,5
82K413	Ø4,2x13
82K416	Ø4,2x16
82K419	Ø4,2x19
82K425	Ø4,2x25
82K438	Ø4,2x38
82K450	Ø4,2x50
92927	Ø4,8x16
82K519	Ø4,8x19
82K522	Ø4,8x22
82K525	Ø4,8x25
82K532	Ø4,8x32
82K538	Ø4,8x38
82K545	Ø4,8x45
82K550	Ø4,8x50
SCA560	Ø4,8x60
82K616	Ø5,5x16
82K619	Ø5,5x19
82K625	Ø5,5x25

Accessories

Screws

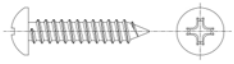

DIN 7981C - ST.ST. - A2

82K632	Ø5,5x32
82K638	Ø5,5x38
290-112	Ø6,3x13
787-570	Ø6,3x32

DIN 7981 - ST.ST. - A2

SCA604	Ø6,3x32

DIN 7982C - ST.ST. - A2

SCC213	Ø3,5x13
82L217	Ø3,5x17
82L310	Ø3,9x9,5
82L313	Ø3,9x13
82L413	Ø4,2x13
82L416	Ø4,2x16
95170	Ø4,2x19
290-003	Ø4,2x25
95168	Ø4,2x45
82L460	Ø4,2x60
82L510	Ø4,8x10
82L513	Ø4,8x13
82L519	Ø4,8x19
92256	Ø4,8x22
82L525	Ø4,8x25
82L532	Ø4,8x32
82L538	Ø4,8x38
82L545	Ø4,8x45
82L560	Ø4,8x60

Z2

SCZ813	Ø4x25
SCZ814	Ø5x40
SCZ815	Ø5x50
SCZ816	Ø5x60
SCZ817	Ø5x70
SCZ819	Ø5x80
SCZ834	Ø6x120

DIN 7982F

SCY400	Ø4,2x16

DIN 7983C

82M322	Ø3,9x22

DIN 7984

293-100	M5x10
703-682	M6x8

DIN 7985 - ST.ST. - A2

SCZ822	M5x8
291-300	M5x10
80N516	M5x16
80N618	M6x18
291-301	M6x10
80N620	M6x20
80N625	M6x25

DIN 7991 - ST.ST. - A2

SCP601	M5x10
293-200	M5x25
SCP616	M6x16
80T825	M8x25

DIN 9021 - ST.ST. - A2

SCY504	M5
6U6000	M6

ST.ST. - A2

280-104	M8x45

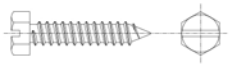

ST.ST. - A2

82J525	Ø4,8x25

ST.ST. - A2

91641	Ø6,3x32

ST.ST. - A2

SCZ401	Ø4,2x16

ST.ST. - A2

83K314	Ø3,9x14

ST.ST. - A2

290-010	Ø4,2x9,5

ST.ST. - A2

83J639	Ø5,5x39
83J647	Ø5,5x47
83J658	Ø5,5x58

ST.ST. - A2

83Z639	Ø5,5x39
83Z647	Ø5,5x47
83Z658	Ø5,5x58

ST.ST. - A2

85Z416	Ø4,2x16

ST.ST. - A2

84Z512	M5x0,8 - 1,5
90459	M5x0,25 - 3,0
91749	M5x3,0 - 5,5
93024	M6x0,5 - 3,0

ST.ST. - A2

SCZ019	M3.2x10 - 5.5
90676	M5x1,5 - 4,0

ST.ST. - A2

80Z814	M8x14

ST.ST. - A2

SCZ402	Ø4.2x28

ST.ST. - A2

SCZ617	Ø5.5x107

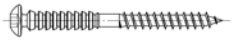

ST.ST. - A2

SCZ604	Ø6x70

DIN 85A

SCZ821	M4x12
SCZ823	M5x14
SCZ824	M4x16

VSM13328 BN658 A2

SCN001	M4 x 12

DIN 7343

SCZ406	25x12

O-ring

CO0176	37x2.0
CO0177	52x2.0

Choice of hardware

DRAWING	NR	DESCRIPTION	APPLICATION
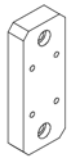	***CO0214*** TGD6001	Connection piece for ZB0052 TGD6004	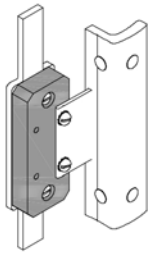
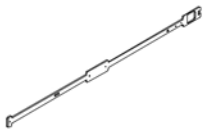	***SF3054*** TGD6002	Locking plate for ZB0052 TGD6004	
	***SF3055*** TGD6003	Additional locking plate (H ≥ 2700) for ZB0052 TGD6004	
	***ZB0052*** TGD6004	Handle	
	***SF2019*** TGD6005	Lock left	

Choice of hardware

Hardware

DRAWING	NR		DESCRIPTION	APPLICATION
	***SF2020*** TGD6006		Lock right	
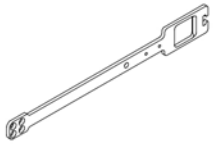	***SF3056*** TGD6007		Locking plate for lock SF2019 / SF2020 (TGD6005 / TGD6006)	
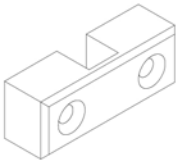	***CO1151*** TGD6008		Locking part for SF9065 TGD6010	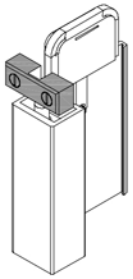
	***SF2018*** TGD6009		Lock for D9V 113, fix-slide-fix TGD2200	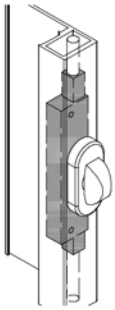
 L=2500mm	***SF9065*** TGD6010	2500	Rod for lock SF2018 TGD6009	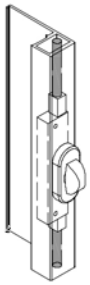

DRAWING	NR	DESCRIPTION	APPLICATION
	***SF9066*** TGD6011	Lock knob for SF2018 TGD6009	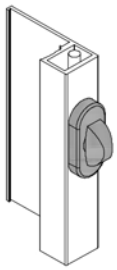
	***VS9979*** TGD3818	Rod guide	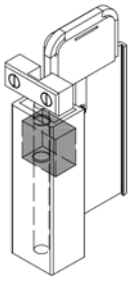
	***SV2088*** TGD6012	Adjustable locking hook	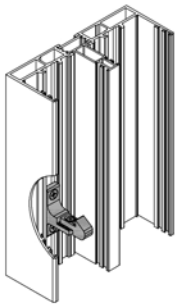
	***SV2089*** TGD6013	Adjustable locking hook (4-vent)	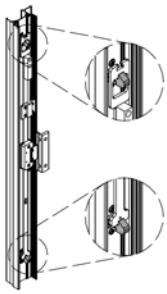
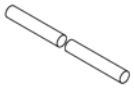	***CO1199*** TGD4003	Stainless steel rail	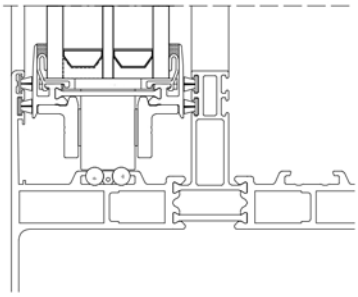

Choice of hardware

Hardware

DRAWING	NR	DESCRIPTION	APPLICATION
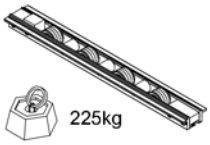	***SV0037*** TGD6014	Carriage bottom	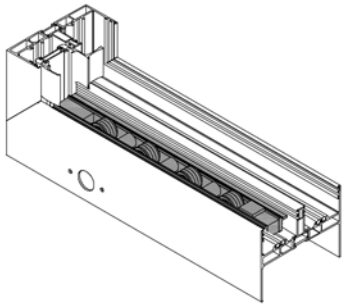
	***SV2090*** TGD6015	Safety case for lock	

Tools and consumables

Tools and consumables

Consumables

No	(mm)	Description	Drawing
541-000		Step drill Ø6 → 15 mm	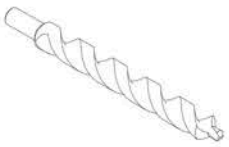
TG9011		Step drill Ø6.8 → 15 mm	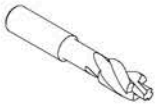
TG9013		Step drill Ø5.5 → 11 mm	
559-017		Scissor for gasket	
590-002		Mastic tube for glueing machine 559-000	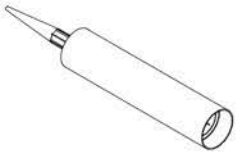
9146		Neutral silicon for manual application	
778-951		Roller guide for glazing gaskets	
97274		Screw-driver for HV4K01	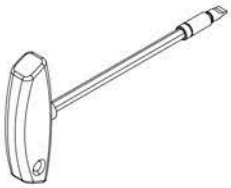

No	(mm)	Description	Drawing
400024		Screwdriver bit for 97274	
79G011		Table for 1 pneumatic tool	 H= 800 mm B= 300 mm L= 450 mm
79G012		Table for 2 pneumatic tools	 H= 800 mm B= 300 mm L= 810 mm
79G013		Table for 3 pneumatic tools	 H= 800 mm B= 300 mm L= 1160 mm
79G501		Scissor for gasket	
79G503		Spatula for pushing in glazing gaskets	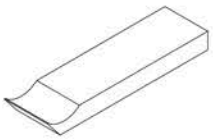
79G504		Scissor for gasket	
79G509		Cotter pin punch	

No	(mm)	Description	Drawing
79G605		Pneumatic tool for glue	
79G606		1-component glue PUR (1000 ml)	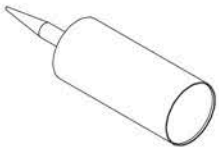
79G607		Cleaner for glue	
79G611		1-component glue PUR for cleats (310 ml)	
79G612		1-component glue PUR for cleats (580 ml)	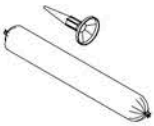
79G622		Glue	
BT1008		Elastic PE foam that follows the joints movements up to 50% and is ideal for sealing around aluminium joinery. It provides a durable insulation and has special sound insulating properties (750 ml)	

No	(mm)	Description	Drawing
BT1009		Seal and adhesive kit based on hybrid polymer for bonding and sealing of window foils BT1001-BT1007 in indoor and outdoor joinery (600ml)	
TA9146		Repair brush	
TG6020		Cleaning product (400 ml)	
TG6021		Cleaning gel for structure coating (500 ml)	
TG6022		Set of 50 disposable wipes	
TG6023		Cleaner for anodised surfaces	
TG6024		Conservator for anodised surfaces	

Tools and consumables

Consumables

No	(mm)	Description	Drawing
TG6025		Maintenance set for anodised surfaces	
TG6026		Cleaner for coated surfaces	
TG6027		Conservator for coated surfaces	

Sections

Sections

2-Rail / 3-Rail

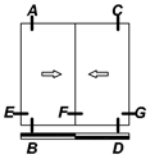

	D9V004 / D9V005 TGD1200 / TGD1201		KU0015 / D9V004 TGD4005 / TGD1200	
A	ART2-SEC-102	85	ART2-SEC-047	89
B	ART2-SEC-025	85	-	-
C	ART2-SEC-104	86	ART2-SEC-048	89
D	ART2-SEC-103	86	-	-
E	ART2-SEC-105	87	ART2-SEC-049	90
F	ART2-SEC-026	88	ART2-SEC-050	91
G	ART2-SEC-106	87	ART2-SEC-051	90

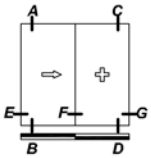

	D9V005 / D9V004 TGD1201 / TGD1200		KU0015 / D9V004 TGD4005 / TGD1200	
A	ART2-SEC-002	92	ART2-SEC-034	96
B	ART2-SEC-016	92	-	-
C	ART2-SEC-004	93	ART2-SEC-035	96
D	ART2-SEC-003	93	-	-
E	ART2-SEC-005	94	ART2-SEC-036	97
F	ART2-SEC-006	95	ART2-SEC-037	98
G	ART2-SEC-007	94	ART2-SEC-038	97

	D9V005 / D9V004 + CO0237 (40 мм) TGD1201 / TGD1200 + TGD4006		KU0015 / D9V004 + CO0237 (46 мм) TGD4005 / TGD1200 + TGD4006	
A	ART2-SEC-012	99	ART2-SEC-014	104
B	ART2-SEC-011	99	ART2-SEC-013	104
C	ART2-SEC-095	100	ART2-SEC-099	103
D	ART2-SEC-096	100	ART2-SEC-100	103
E	ART2-SEC-015	101	ART2-SEC-109	105
F	ART2-SEC-097	102	ART2-SEC-110	106
G	ART2-SEC-098	101	ART2-SEC-111	105

For more sections: see SapaTechic.

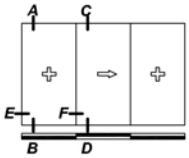

	D9V005 / D9V004 TGD1201 / TGD1200		KU0015 / D9V004 TGD4005 / TGD1200	
A	ART2-SEC-059	107	ART2-SEC-064	109
B	ART2-SEC-060	107	-	-
C	ART2-SEC-061	108	ART2-SEC-065	110
D	ART2-SEC-062	108	-	-
E	ART2-SEC-063	109	ART2-SEC-066	110
F	ART2-SEC-401		ART2-SEC-067	111

	D9V005 / D9V004 TGD1201 / TGD1200		KU0015 / D9V004 TGD4005 / TGD1200	
A	ART2-SEC-301	125	ART2-SEC-075	127
	ART2-SEC-073	125	ART2-SEC-076	127
	ART2-SEC-074	126	ART2-SEC-077	128
	ART2-SEC-302	126	ART2-SEC-078	128

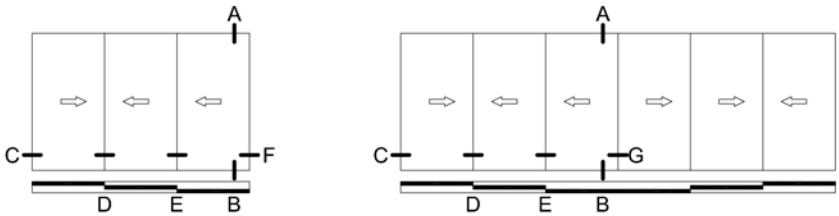

	D9V004 / D9V005 TGD1200 / TGD1201		KU0015 / D9V004 TGD4005 / TGD1200	
A	ART2-SEC-085	114	ART2-SEC-090	120
B	ART2-SEC-086	115	-	-
C	ART2-SEC-201	116	ART2-SEC-091	121
D	ART2-SEC-087	117	ART2-SEC-092	122
E	ART2-SEC-088	118	ART2-SEC-093	123
F	ART2-SEC-089	119	ART2-SEC-094	124

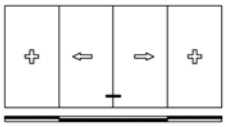

	D9V004 / D9V005 TGD1200 / TGD1201		KU0015 / D9V004 TGD4005 / TGD1200	
A	ART2-SEC-301	125	ART2-SEC-075	127
	ART2-SEC-073	125	ART2-SEC-076	127
	ART2-SEC-074	126	ART2-SEC-077	128
	ART2-SEC-302	126	ART2-SEC-078	128

Sections

Various

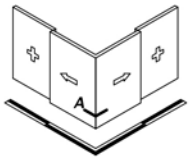

	D9V005 / D9V004 TGD1201 / TGD1200		KU0015 / D9V004 TGD4005 / TGD1200	
A	ART2-SEC-502	129	ART2-SEC-079	130

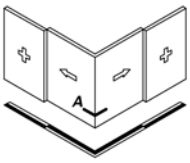

	D9V004 / D9V005 TGD1200 / TGD1201		KU0015 / D9V004 TGD4005 / TGD1200	
	ART2-SEC-501	131	ART2-SEC-080	132

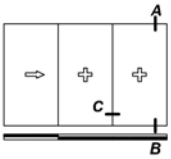

	D9V004 / D9V005 TGD1200 / TGD1201		KU0015 / D9V004 TGD4005 / TGD1200	
A	ART2-SEC-081	133	ART2-SEC-083	134
B	ART2-SEC-082	133	-	-
C	ART2-SEC-451	134	ART2-SEC-084	135

135

A	ART2-SEC-009	136	
B	ART2-SEC-008	136	
C	ART2-SEC-010		

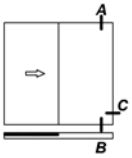

137

A	ART2-SEC-452		

D9V004/D9V005-D9K025 - TOP LEFT
(TGD1200 / TGD1201 - TGD1100)

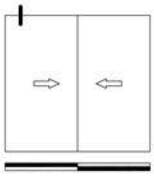

50%

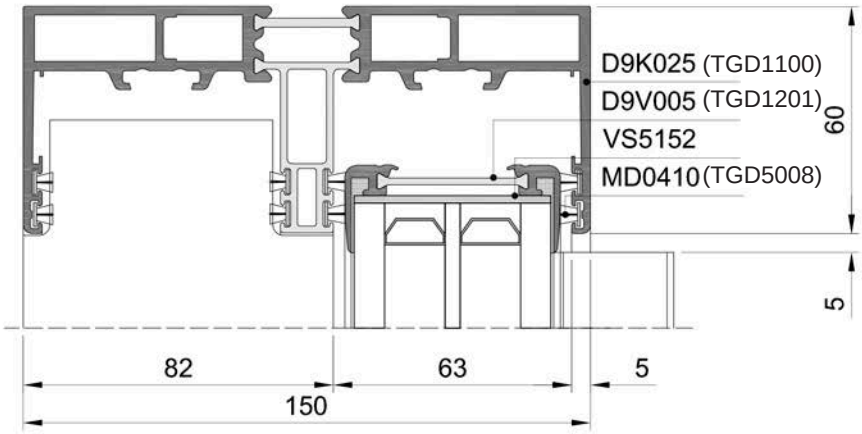

ART2-SEC-102

D9V004/D9V005-D9K029 - BOTTOM LEFT
(TGD1200 / TGD1201 - TGD1101)

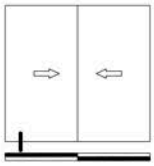

50%

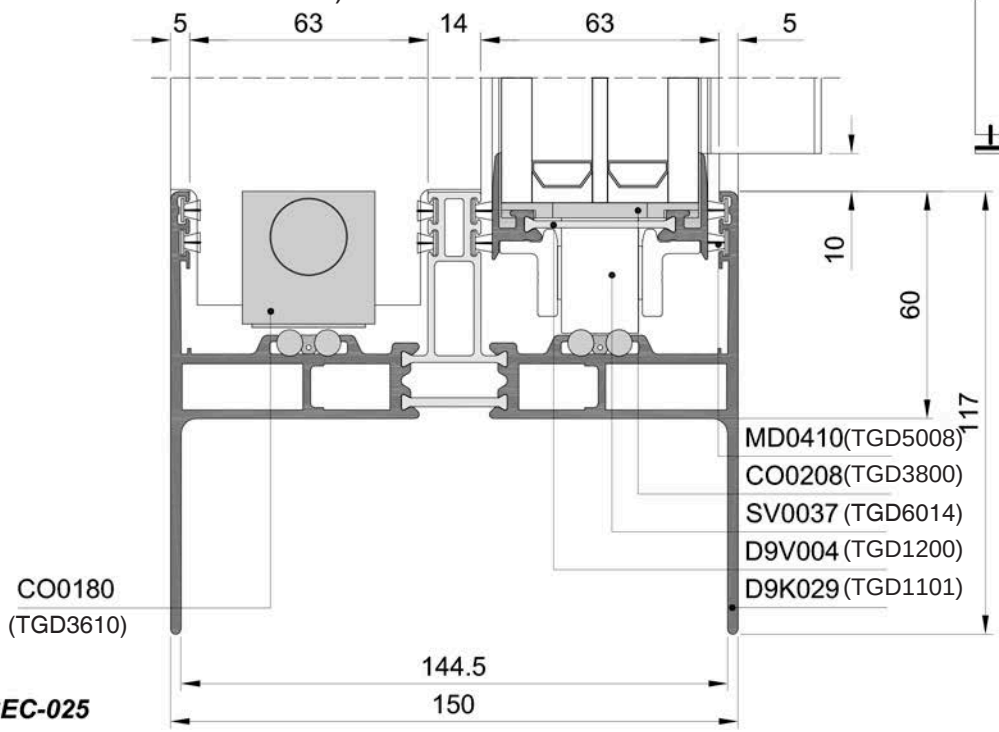

ART2-SEC-025

Sections

2-Rail

TECHNAL®

D9V004/D9V005-D9K025 - Top right
(TGD1200 / TGD1201 - TGD1100)

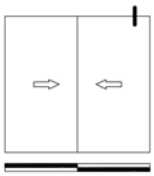

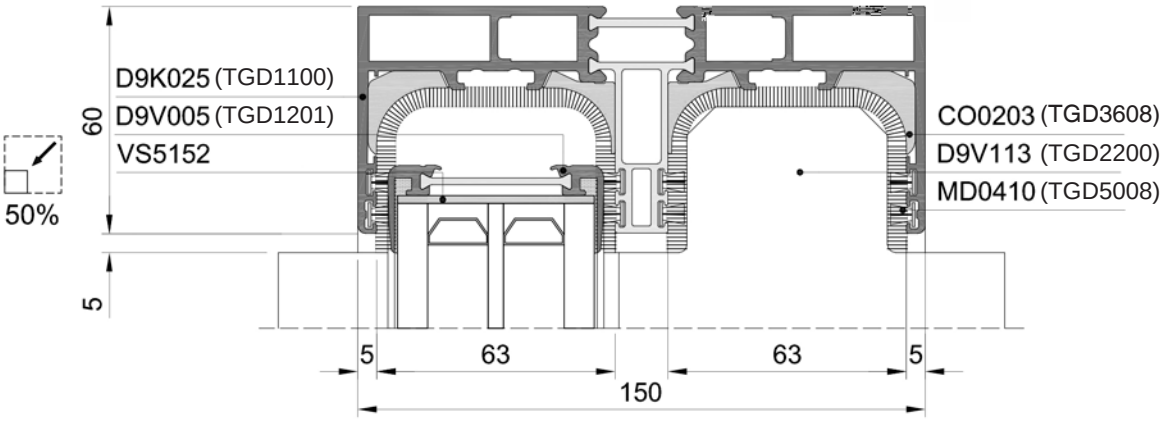

ART2-SEC-104

D9V004/D9V005-D9K025 - Bottom right
(TGD1200 / TGD1201 - TGD1100)

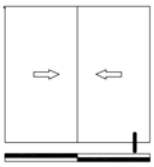

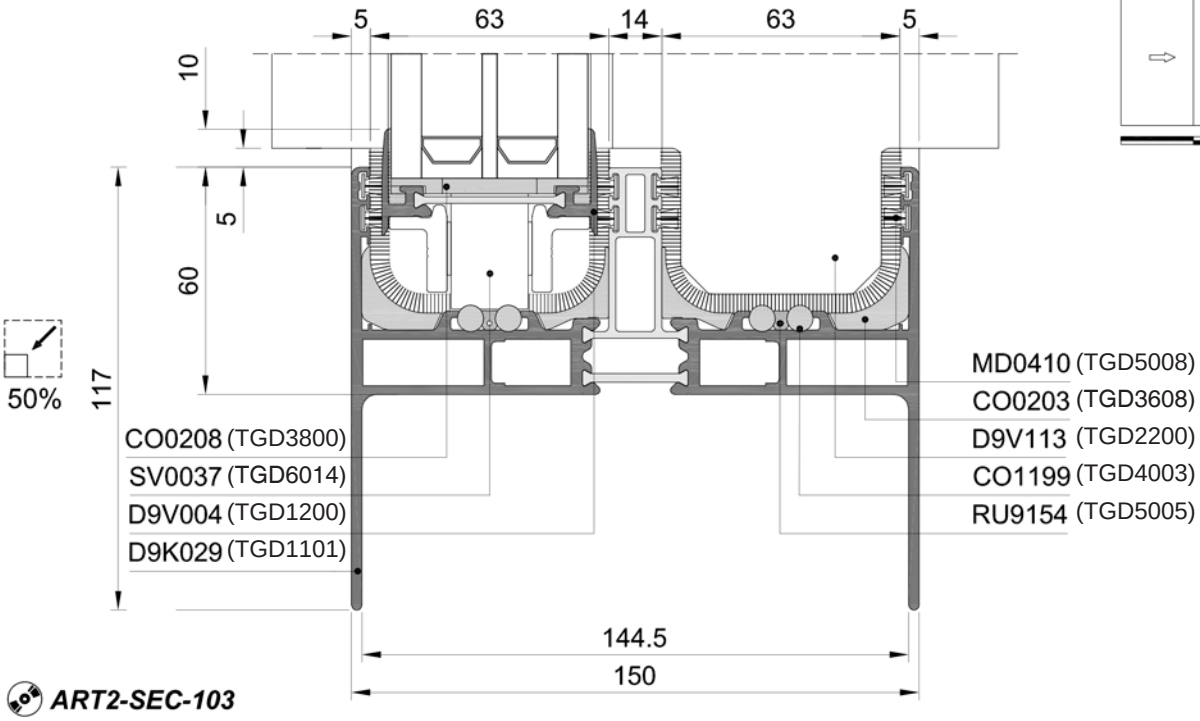

ART2-SEC-103

D9V004/D9V005-D9K025 - LEFT
(TGD1200 / TGD1201 - TGD1100)

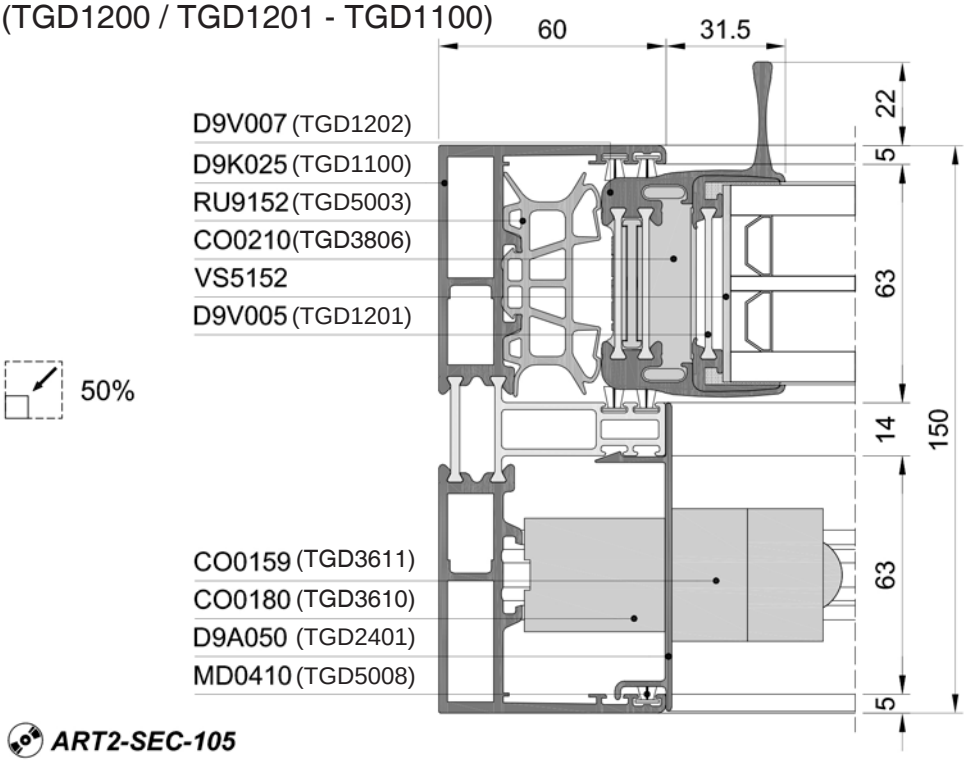

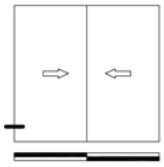

ART2-SEC-105

D9V004/D9V005-D9K025 - RIGHT
(TGD1200 / TGD1201 - TGD1100)

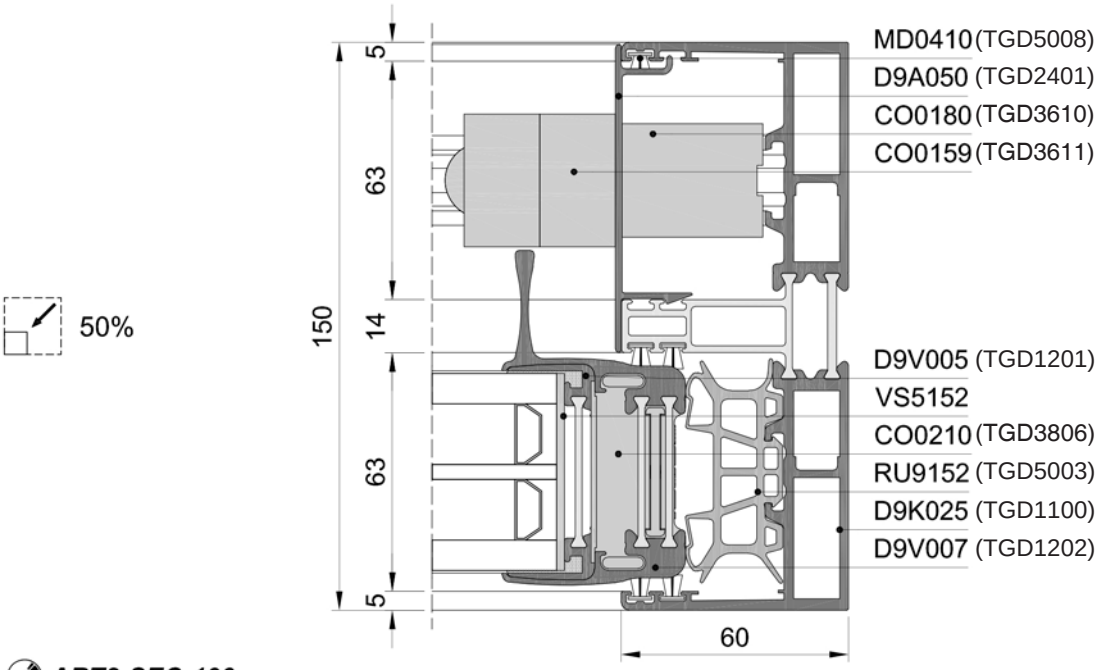

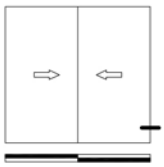

ART2-SEC-106

Sections

2-Rail

TECHNAL®

D9V004/D9V005-D9V113 - MIDDLE
(TGD1200 / TGD1201 - TGD2200)

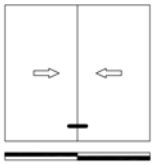

50%

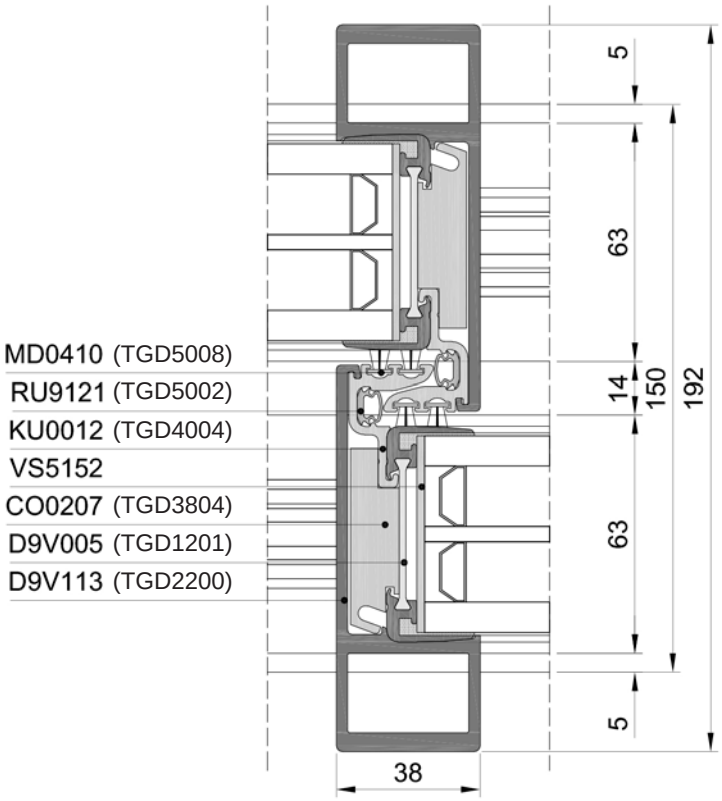

ART2-SEC-026

KU0015/D9V004-D9K025 - TOP LEFT
(TGD4005 / TGD1200 - TGD1100)

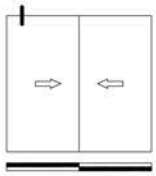

50%

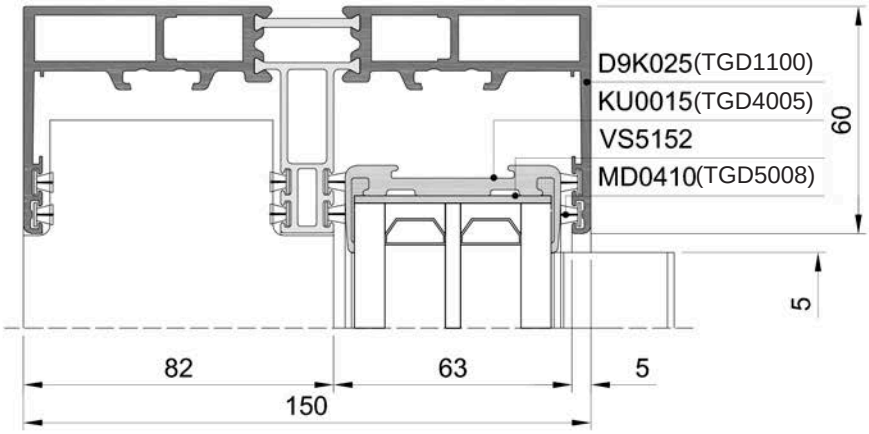

ART2-SEC-047

KU0015/D9V004-D9K025 - TOP RIGHT
(TGD4005 / TGD1200 - TGD1100)

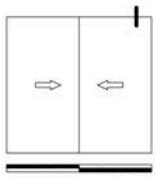

50%

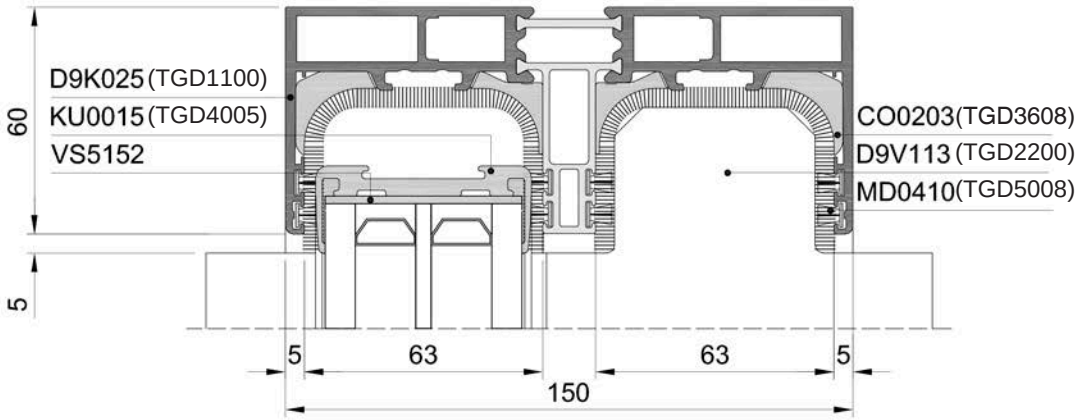

ART2-SEC-048

Sections

2-Rail

TECHNAL®

KU0015/D9V004-D9K025 - LEFT
(TGD4005 / TGD1200 - TGD1100)

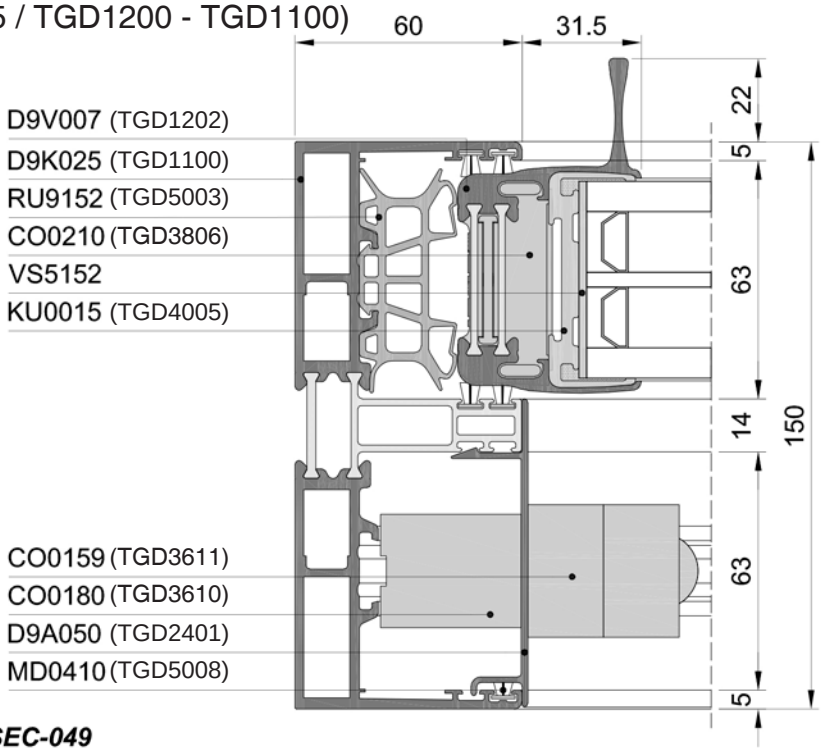

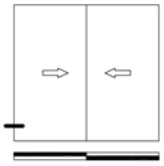

50%

ART2-SEC-049

KU0015/D9V004-D9K025 - RIGHT
(TGD4005 / TGD1200 - TGD1100)

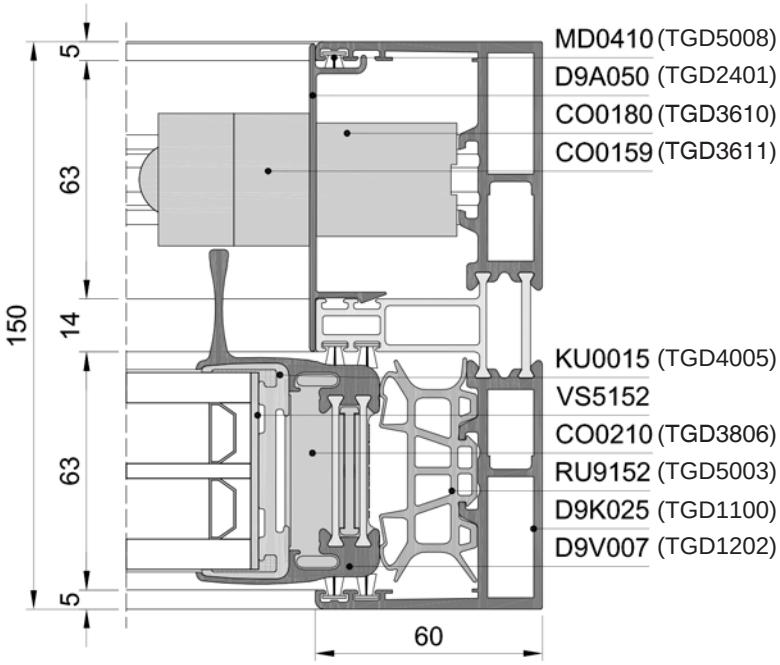

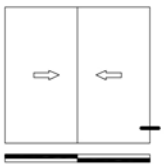

50%

ART2-SEC-051

KU0015/D9V004-D9V113 - MIDDLE
(TGD4005 / TGD1200 - TGD2200)

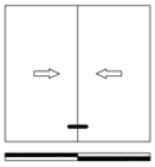

50%

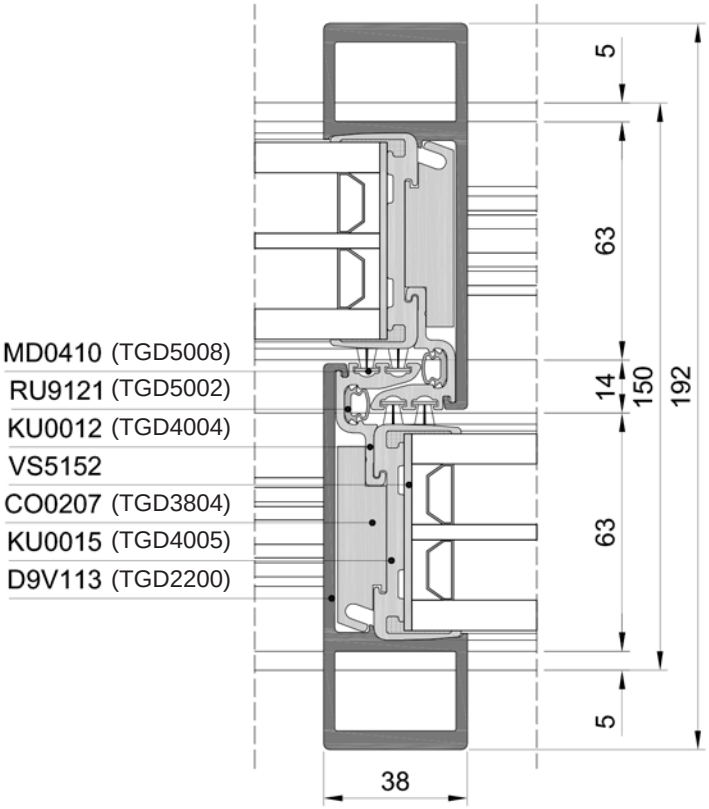

ART2-SEC-050

Sections

2-Rail - Slide-Fix

TECHNAL®

D9V005/D9V004-D9K025 - Top left
(TGD1201 / TGD1200 - TGD1100)

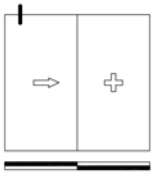

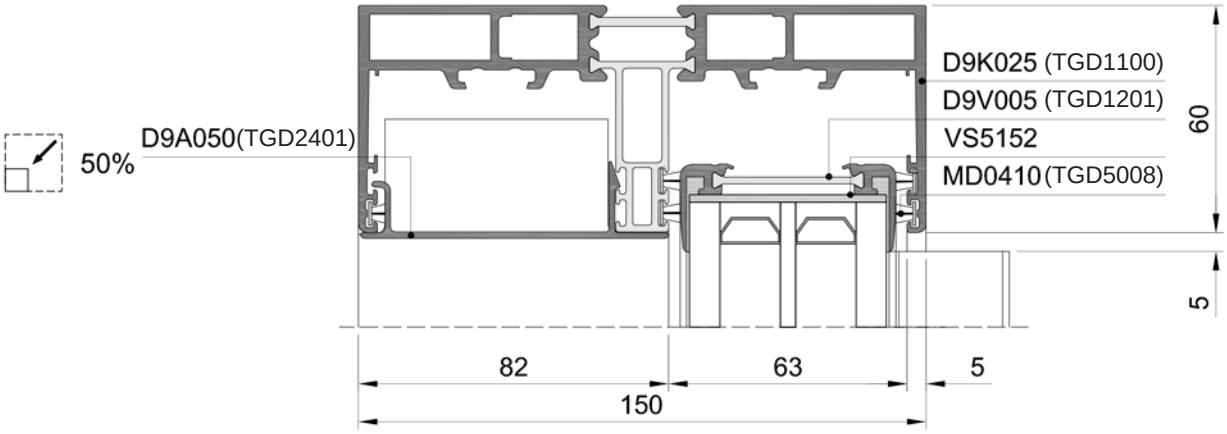

ART2-SEC-002

D9V005/D9V004-D9K029 - Bottom left
(TGD1201 / TGD1200 - TGD1101)

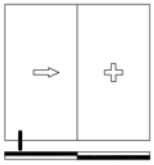

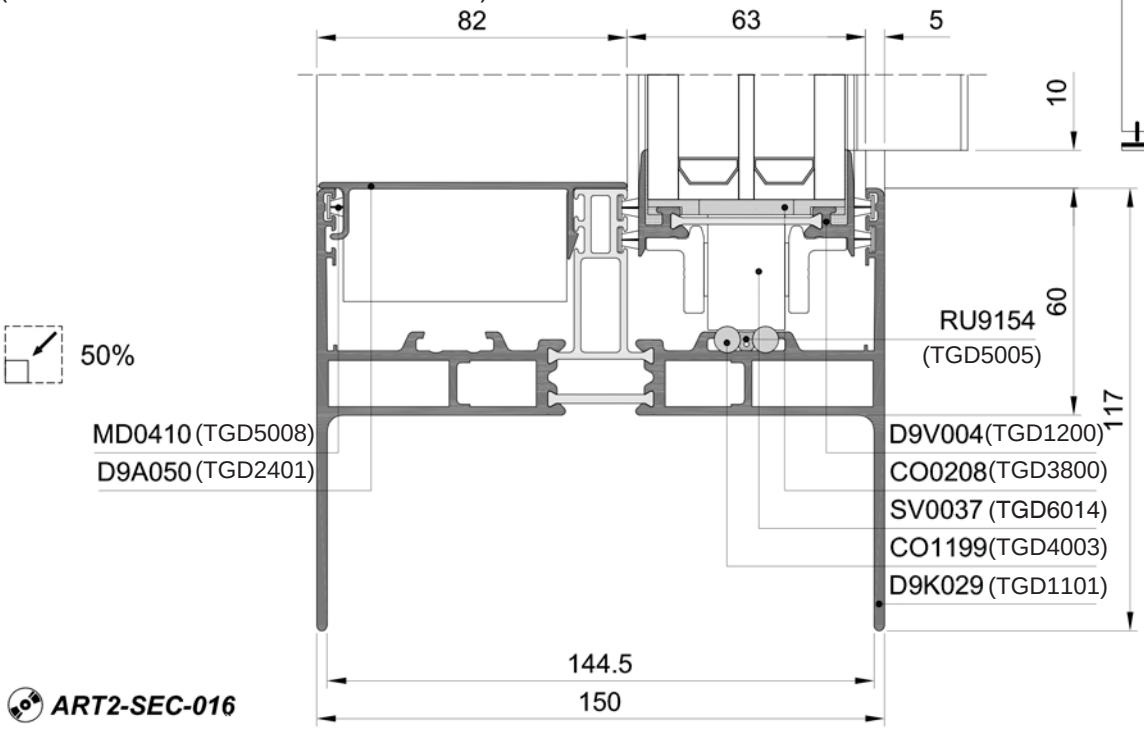

ART2-SEC-016

D9V005/D9V004-D9K025 - TOP RIGHT
(TGD1201 / TGD1200 - TGD1100)

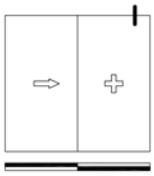

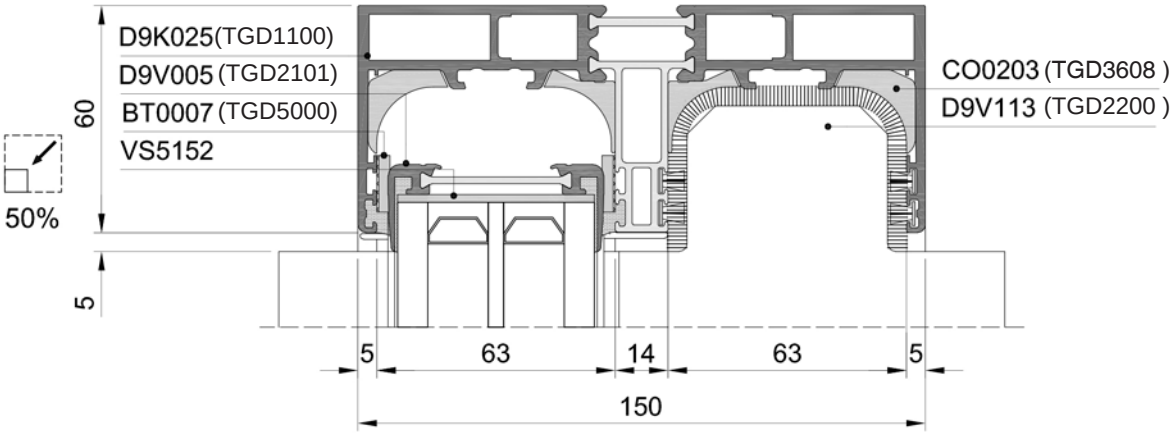

ART2-SEC-004

D9V005/D9V004-D9K029 - BOTTOM RIGHT
(TGD1201 / TGD1200 - TGD1101)

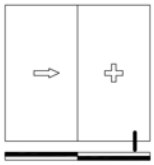

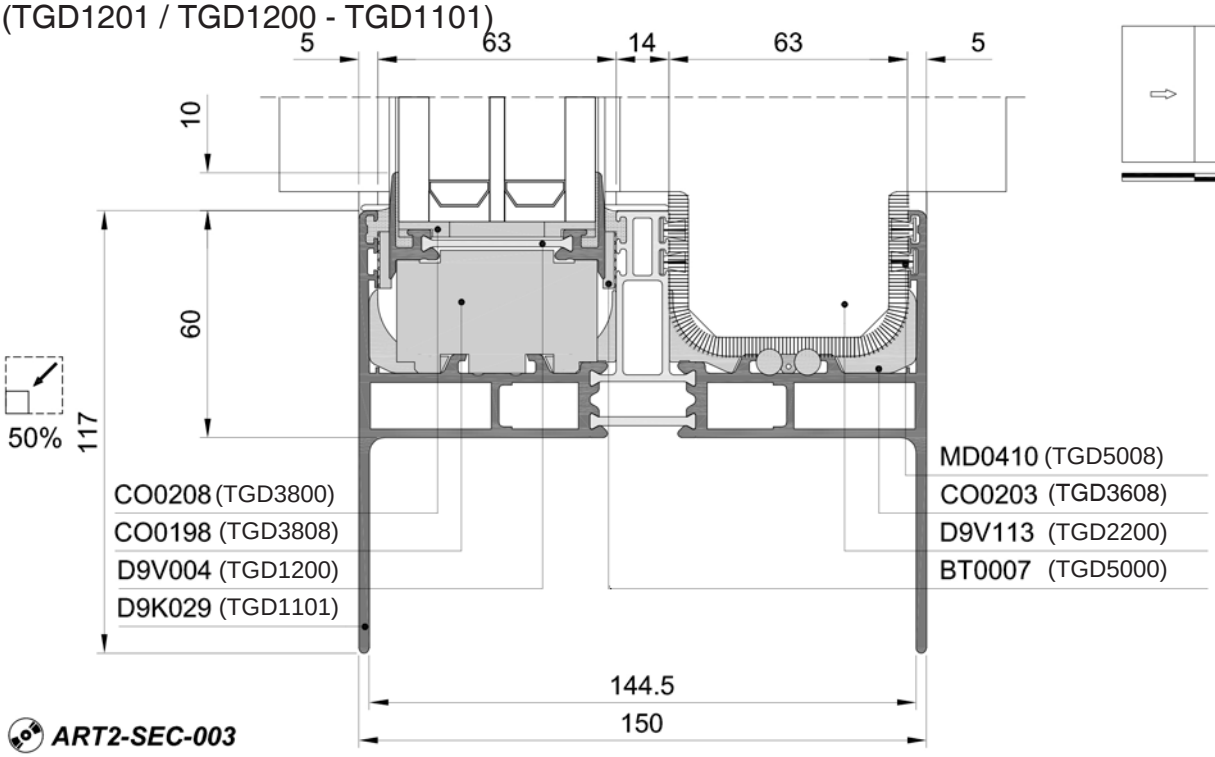

ART2-SEC-003

Sections

2-Rail - Slide-Fix

TECHNAL®

D9V005/D9V004-D9K025 - LEFT
(TGD1201 / TGD1200 - TGD1100)

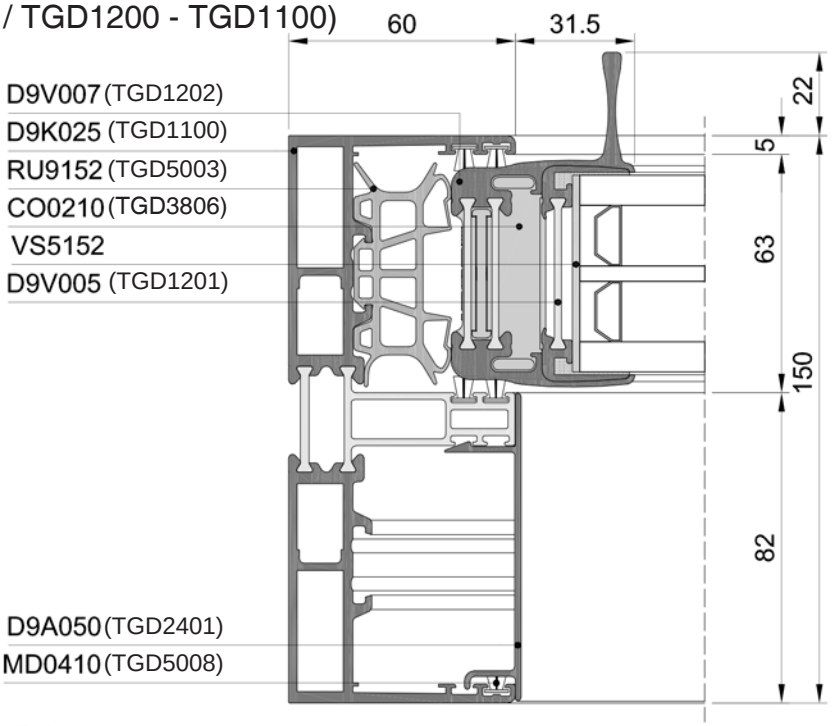

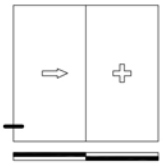

50%

ART2-SEC-005

D9V005/D9V004-D9K025 - RIGHT
(TGD1201 / TGD1200 - TGD1100)

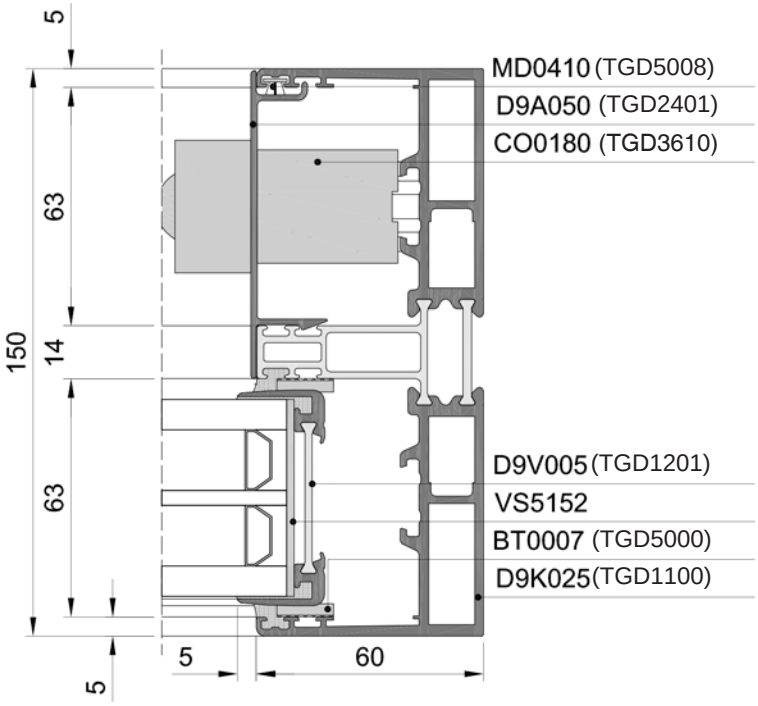

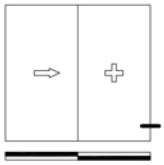

50%

ART2-SEC-007

D9V005/D9V004-D9V113 - MIDDLE
(TGD1201 / TGD1200 - TGD2200)

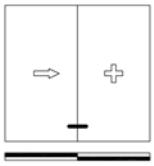

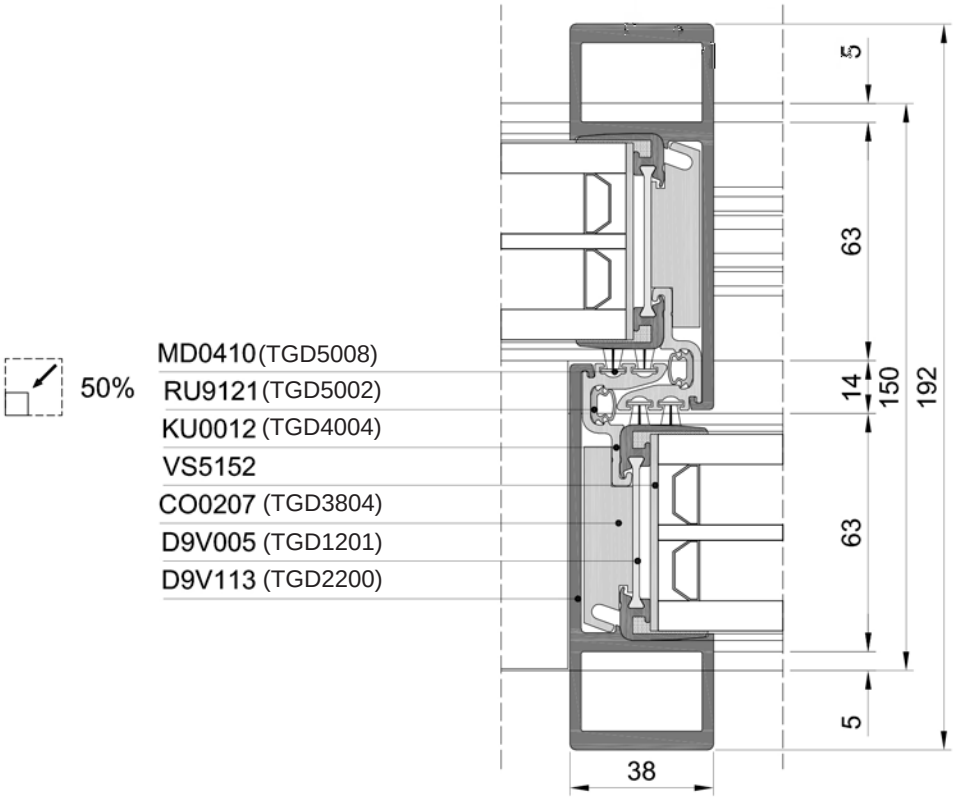

ART2-SEC-006

Sections

2-Rail - Slide-Fix

KU0015/D9V004-D9K025 - TOP LEFT
(TGD4005 / TGD1200 - TGD1100)

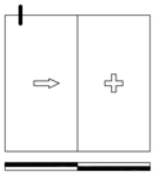

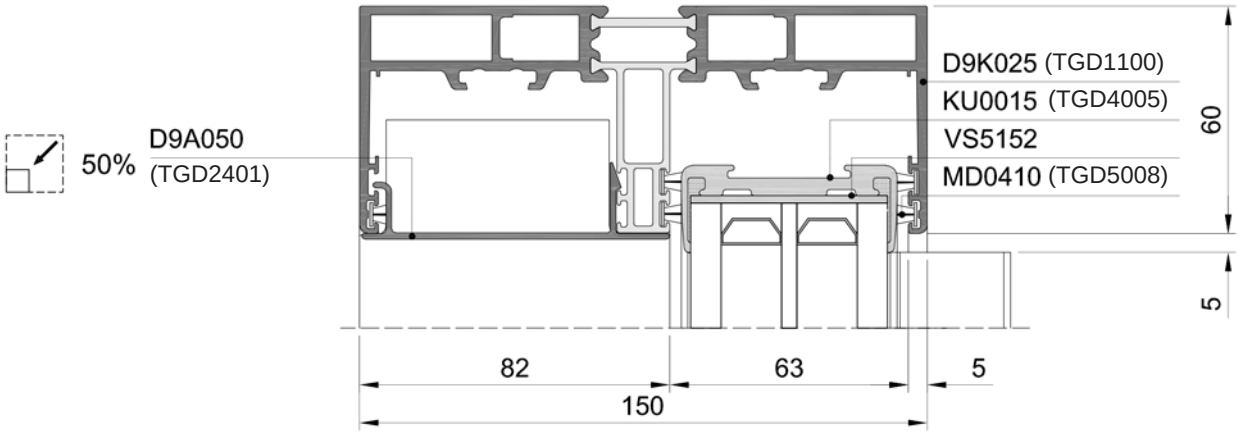

ART2-SEC-034

KU0015/D9V004-D9K025 - TOP RIGHT
(TGD4005 / TGD1200 - TGD1100)

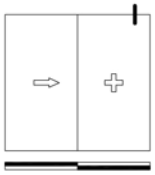

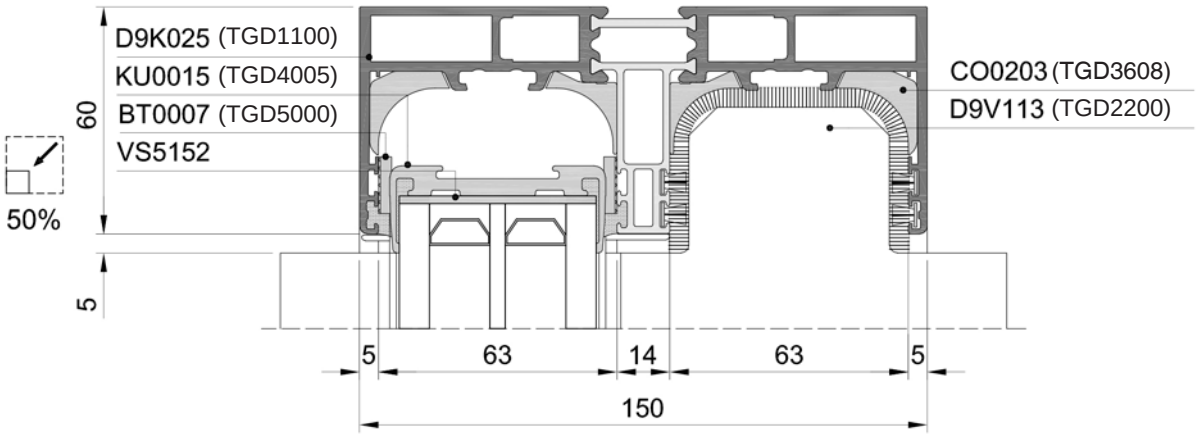

ART2-SEC-035

KU0015/D9V004-D9K025 - LEFT
(TGD4005 / TGD1200 - TGD1100)

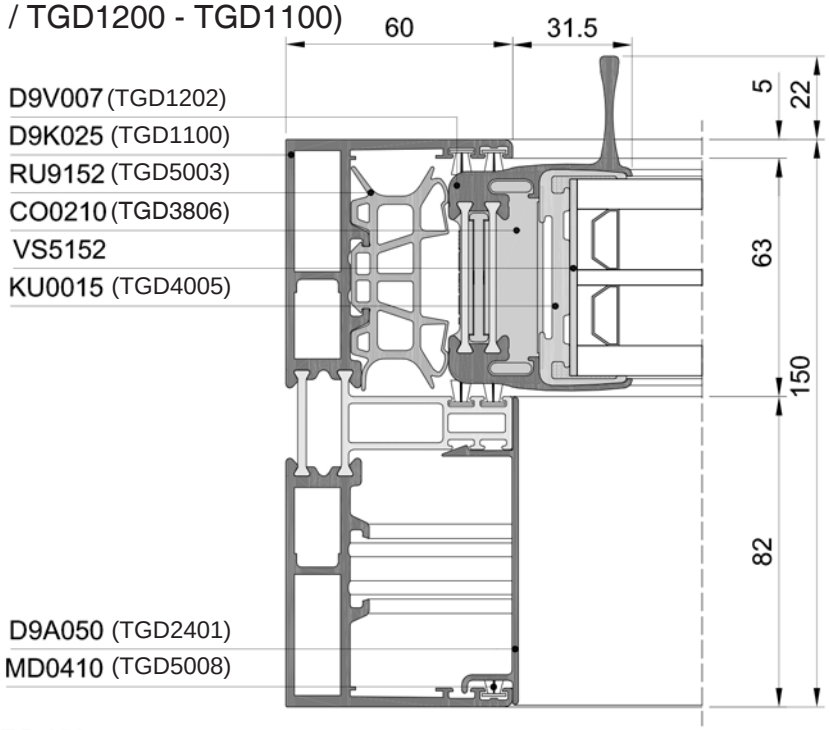

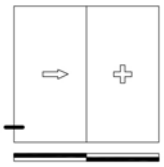

50%

ART2-SEC-036

KU0015/D9V004-D9K025 - RIGHT
(TGD4005 / TGD1200 - TGD1100)

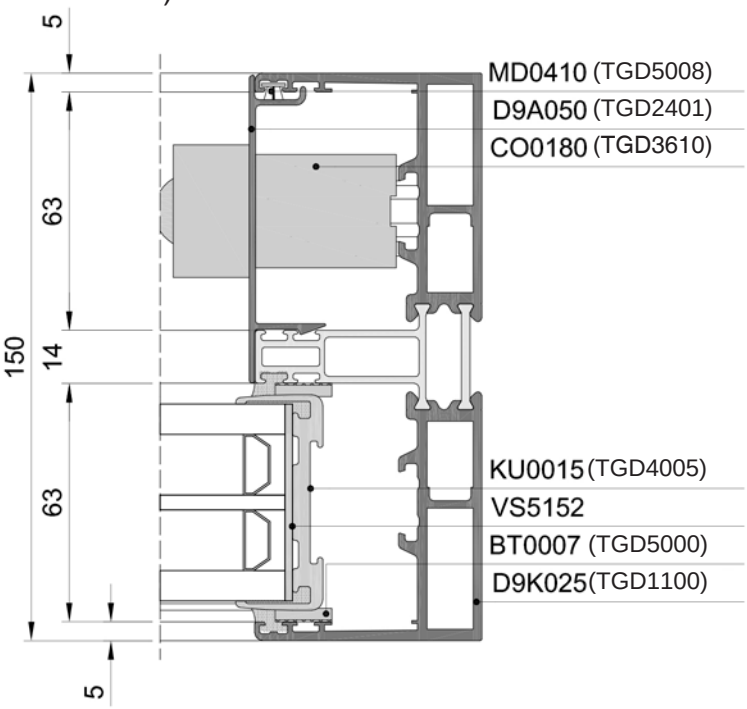

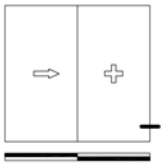

50%

ART2-SEC-038

Sections

2-Rail - Slide-Fix

TECHNAL®

KU0015/D9V004-D9K025 - MIDDLE
(TGD4005 / TGD1200 - TGD1100)

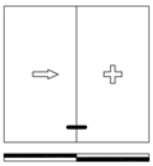

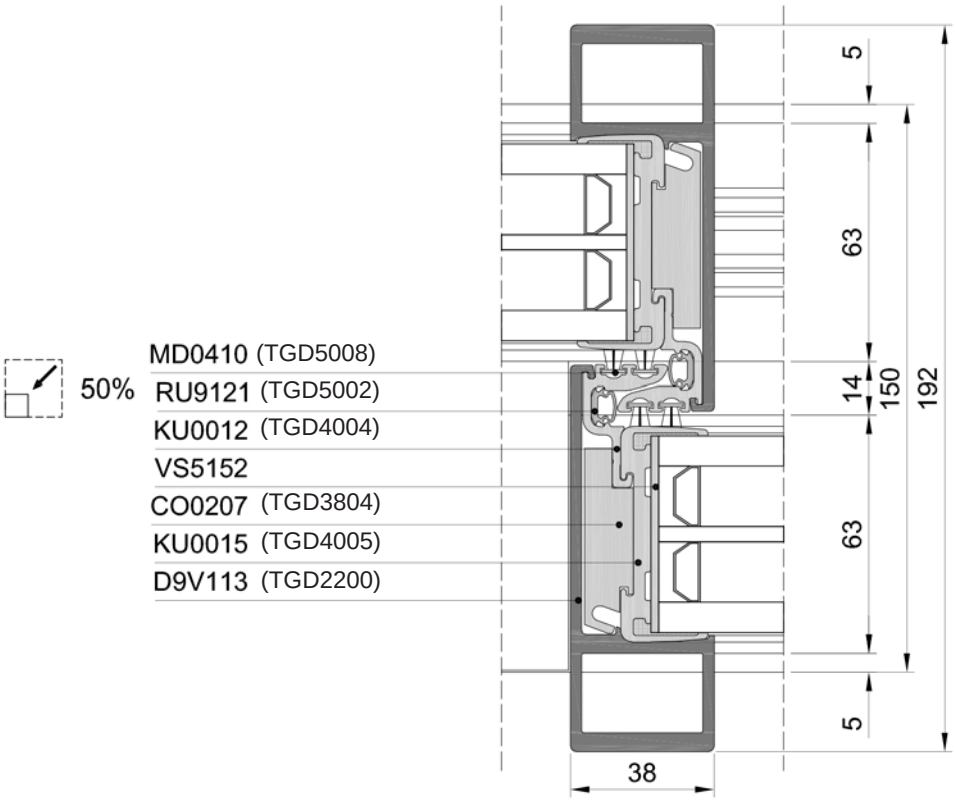

ART2-SEC-037

D9V005/D9V004-D9K025+CO0237 (40 MM) - TOP LEFT
(TGD1201 / TGD1200 - TGD1100+TGD4006)

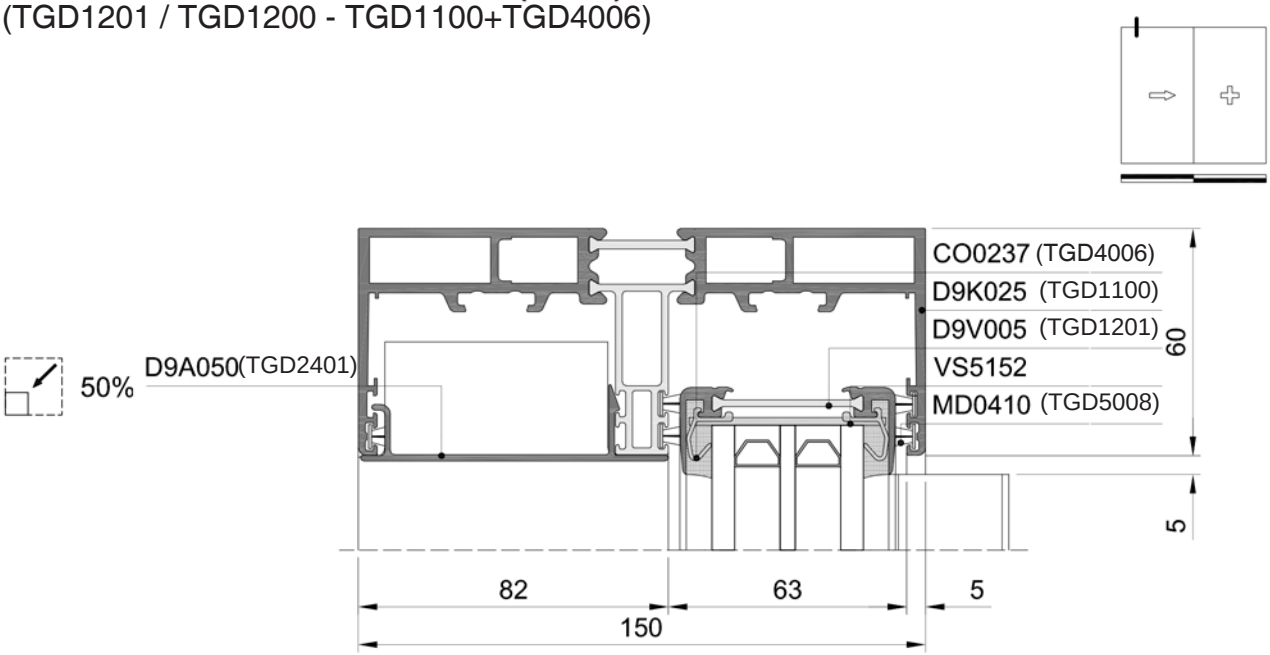

ART2-SEC-012

D9V005/D9V004-D9K029+CO0237 (40 MM) - BOTTOM LEFT
(TGD1201 / TGD1200 - TGD1101+TGD4006)

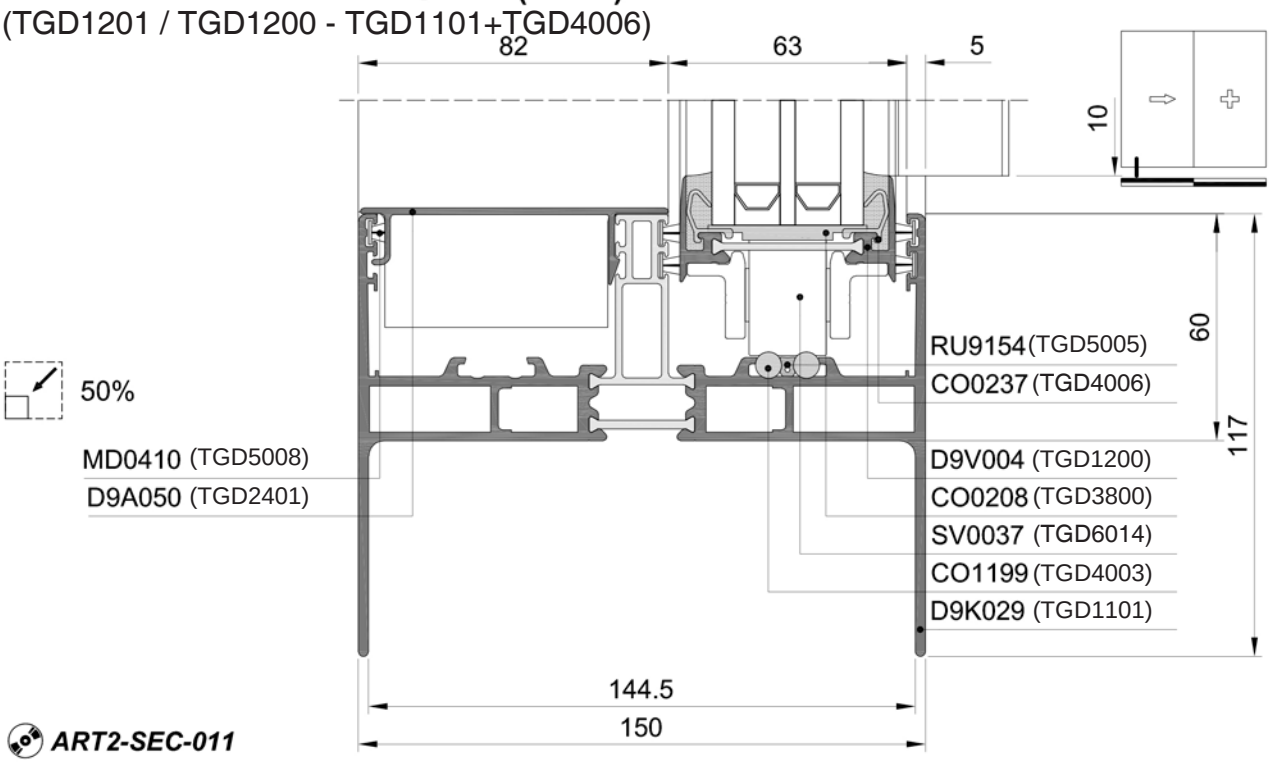

ART2-SEC-011

Sections

2-Rail - Slide-Fix

TECHNAL®

D9V005/D9V004-D9K025+CO0237 (40 MM) - TOP RIGHT
(TGD1201 / TGD1200 - TGD1100 + TGD4006)

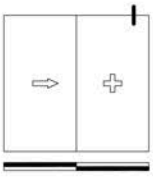

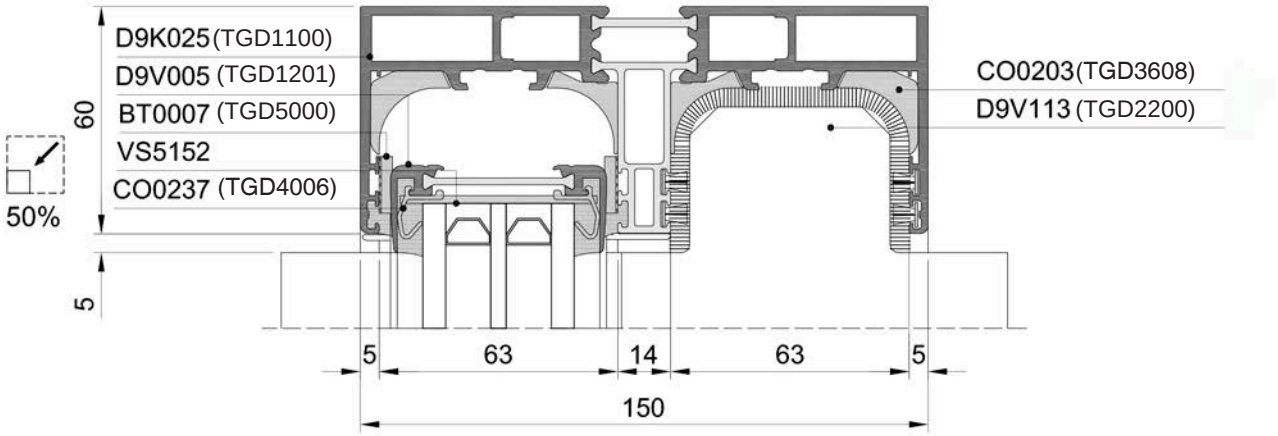

ART2-SEC-095

D9V005/D9V004-D9K029+CO0237 (40 MM) - BOTTOM RIGHT
(TGD1201 / TGD1200 - TGD1101 + TGD4006)

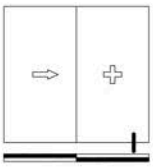

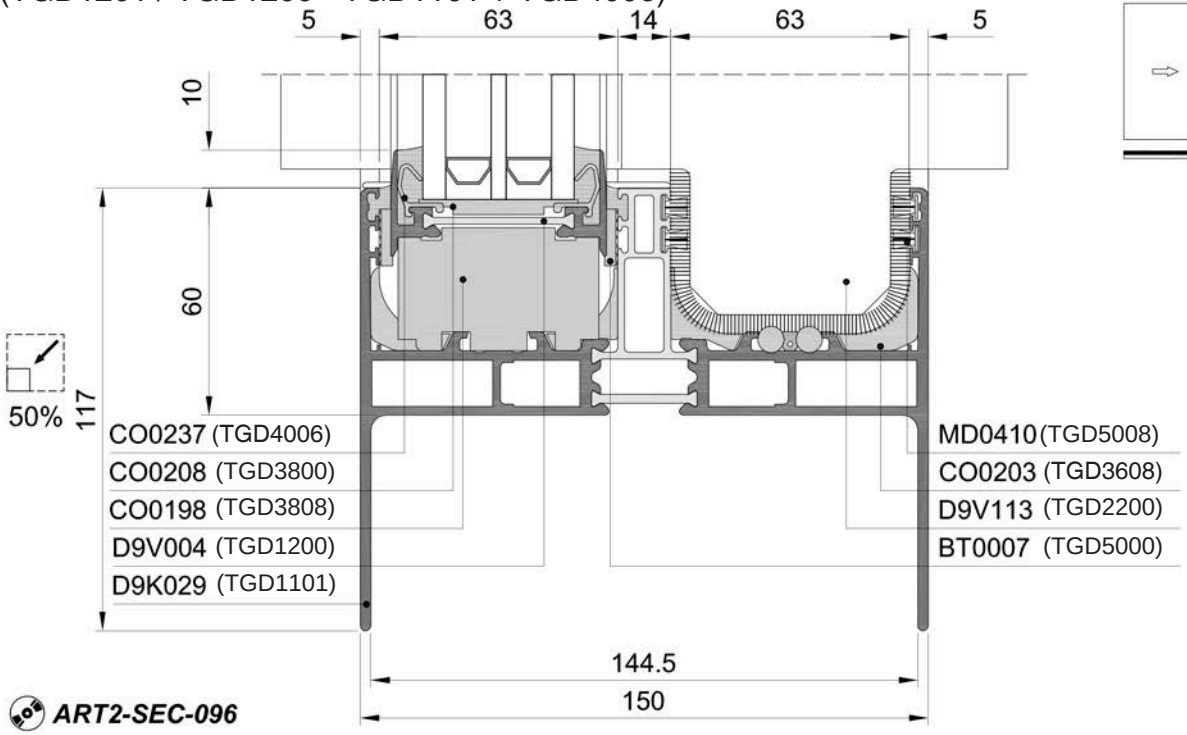

ART2-SEC-096

D9V005/D9V004-D9K025+CO0237 (40 MM) - LEFT
(TGD1201 / TGD1200 - TGD1100 + TGD4006)

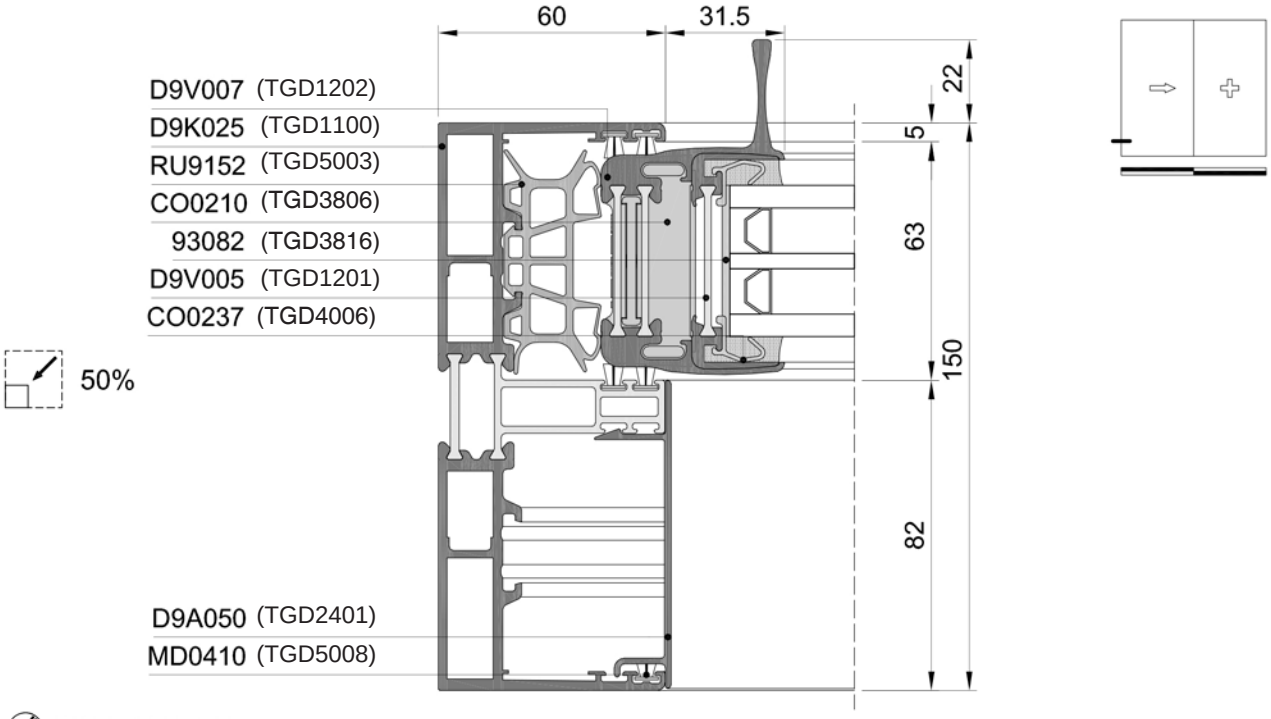

ART2-SEC-015

D9V005/D9V004-D9K025+CO0237 (40 MM) - RIGHT
(TGD1201 / TGD1200 - TGD1100 + TGD4006)

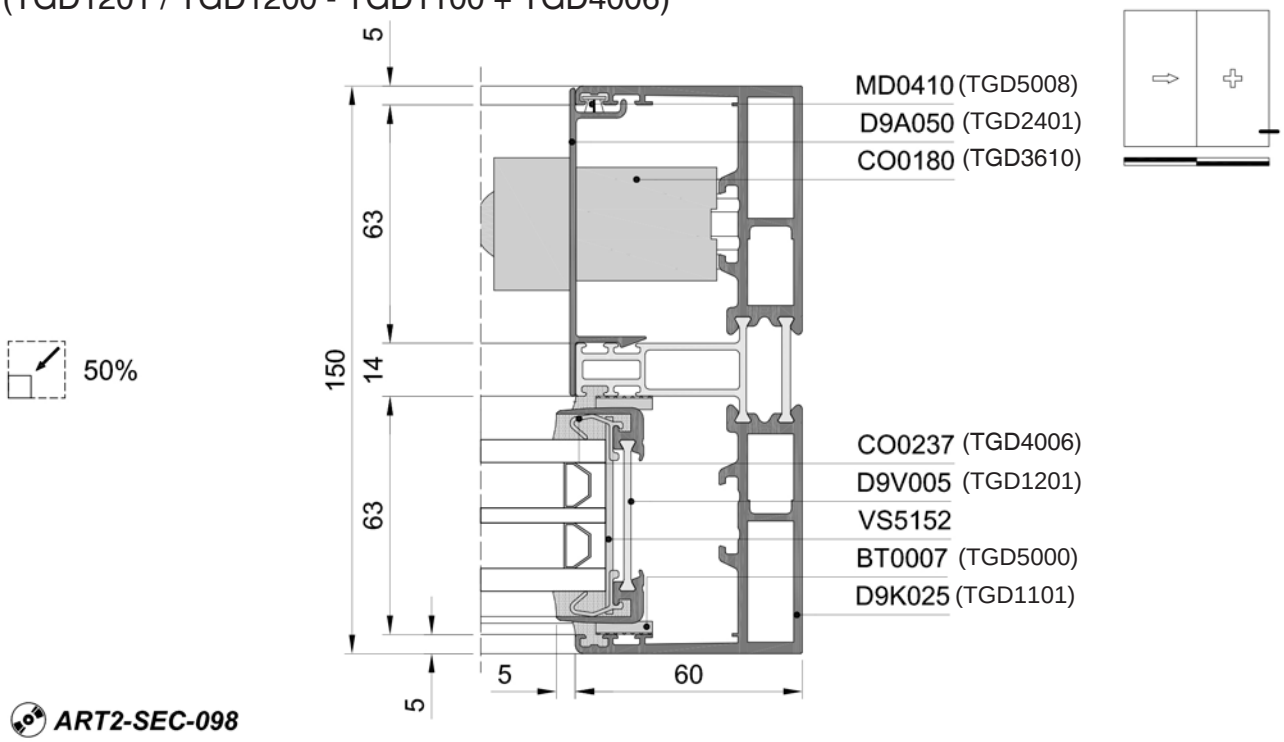

ART2-SEC-098

Sections

2-Rail - Slide-Fix

TECHNAL®

D9V005/D9V004-D9K025+CO0237 (40 MM) - MIDDLE
(TGD1201 / TGD1200 - TGD1100 + TGD4006)

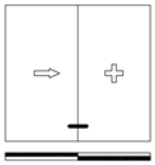

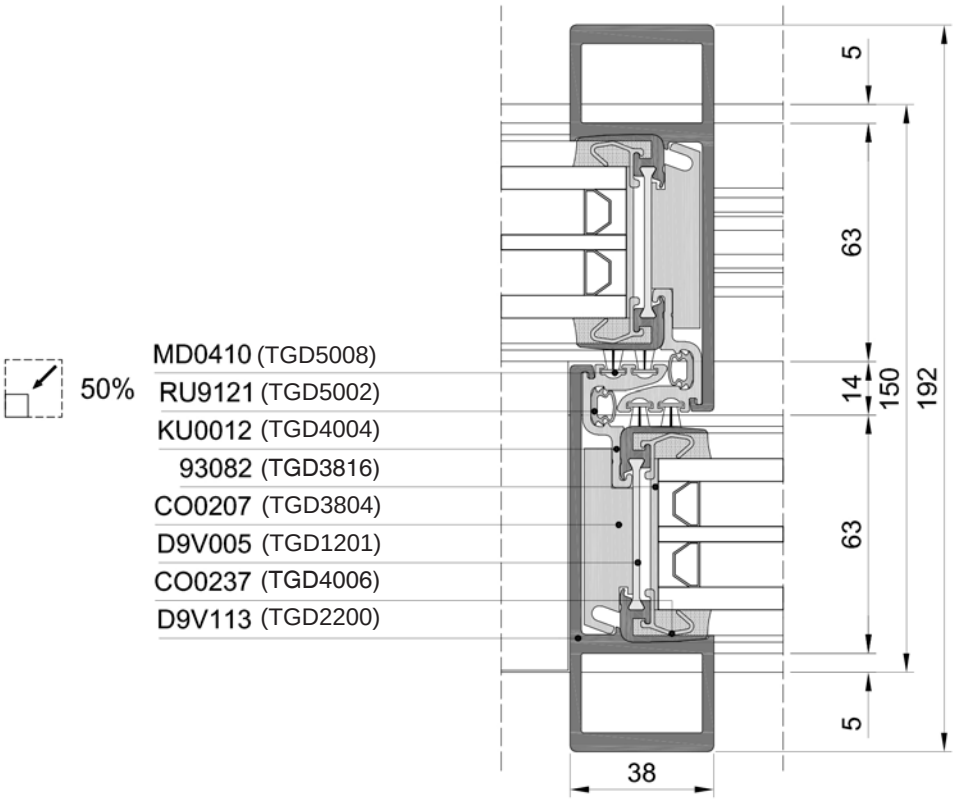

D9V005/D9V004-D9K025+CO0237 (46 MM) - TOP RIGHT
(TGD1201 / TGD1200 - TGD1100 + TGD4006)

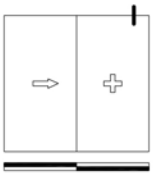

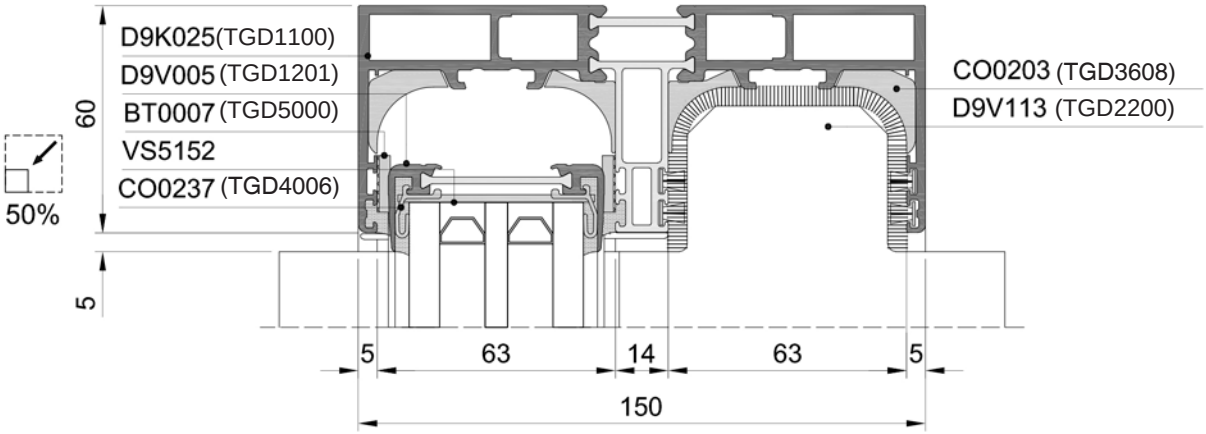

ART2-SEC-099

D9V005/D9V004-D9K029+CO0237 (46 MM) - BOTTOM RIGHT
(TGD1201 / TGD1200 - TGD1101 + TGD4006)

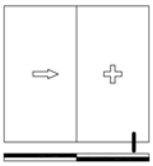

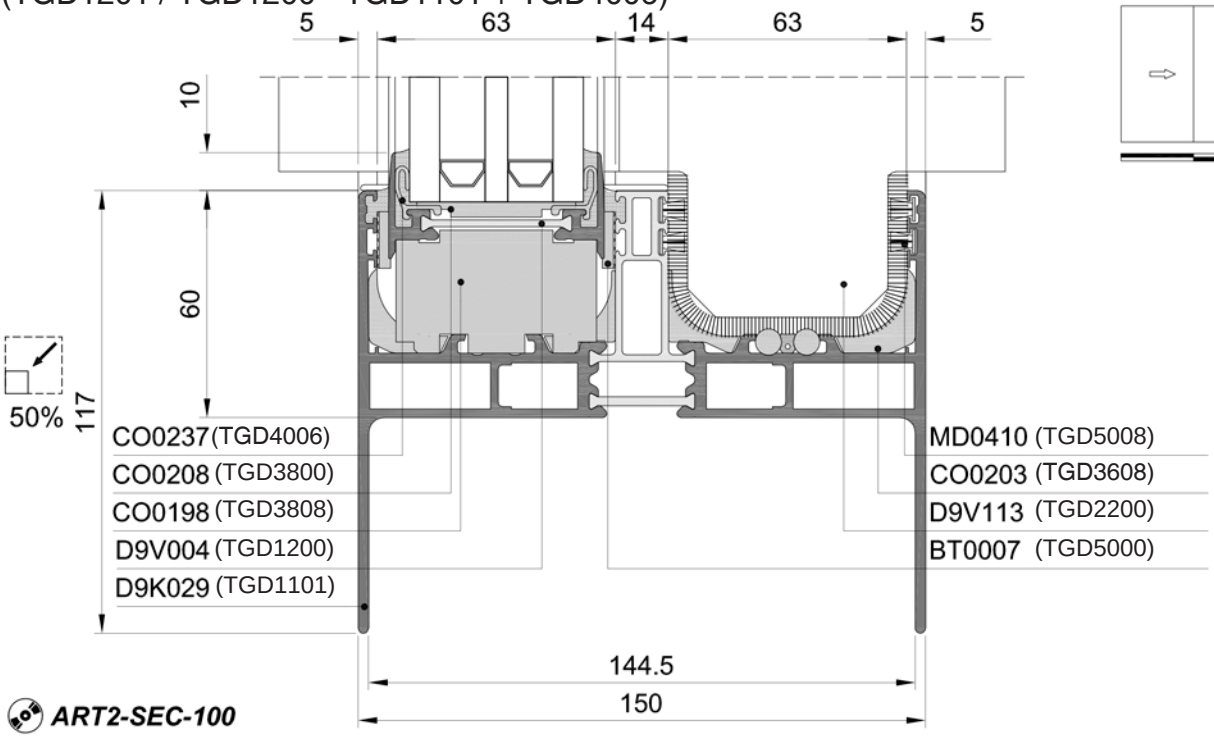

ART2-SEC-100

Sections

2-Rail - Slide-Fix

TECHNAL®

D9V005/D9V004-D9K025+CO0237 (46 MM) - TOP LEFT
(TGD1201 / TGD1200 - TGD1100 + TGD4006)

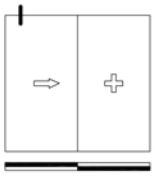

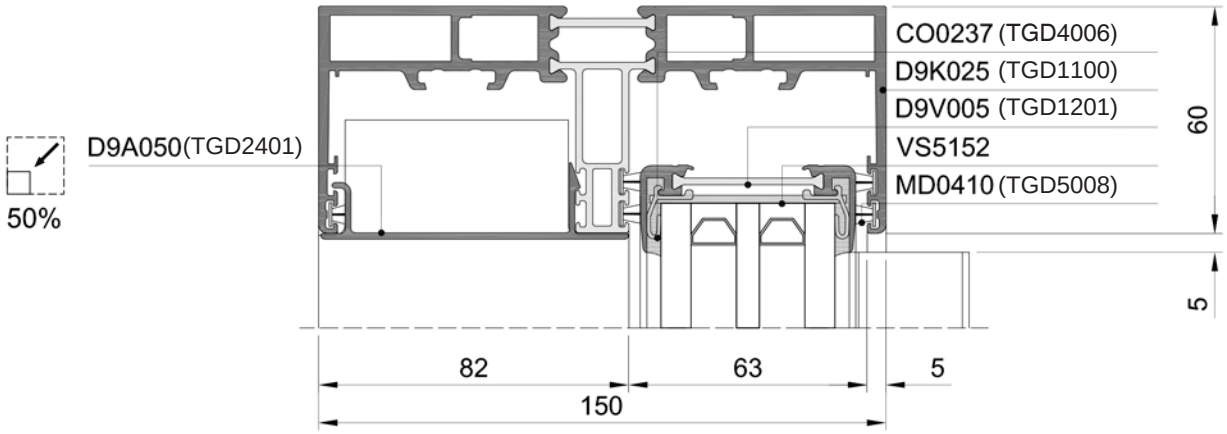

ART2-SEC-014

D9V005/D9V004-D9K029+CO0237 (46 MM) - BOTTOM LEFT
(TGD1201 / TGD1200 - TGD1101 + TGD4006)

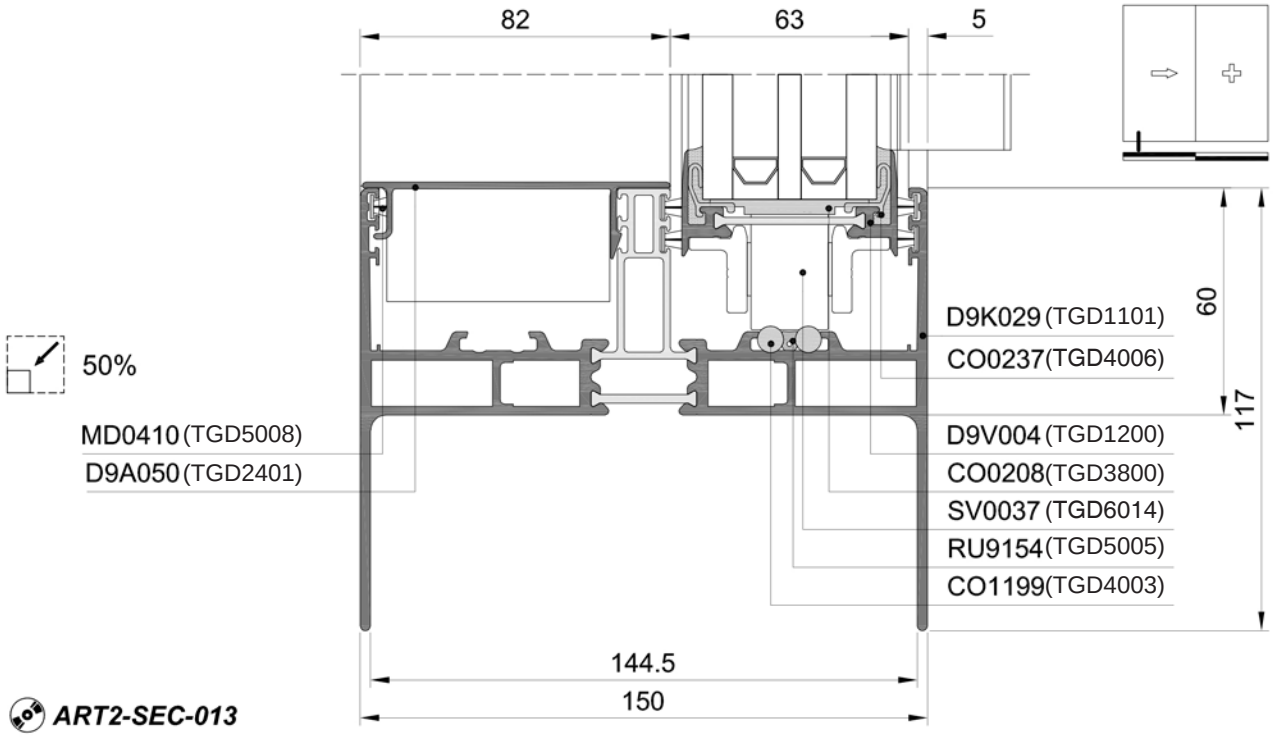

ART2-SEC-013

D9V005/D9V004-D9K025+CO0237 (46 MM) - LEFT
(TGD1201 / TGD1200 - TGD1100 + TGD4006)

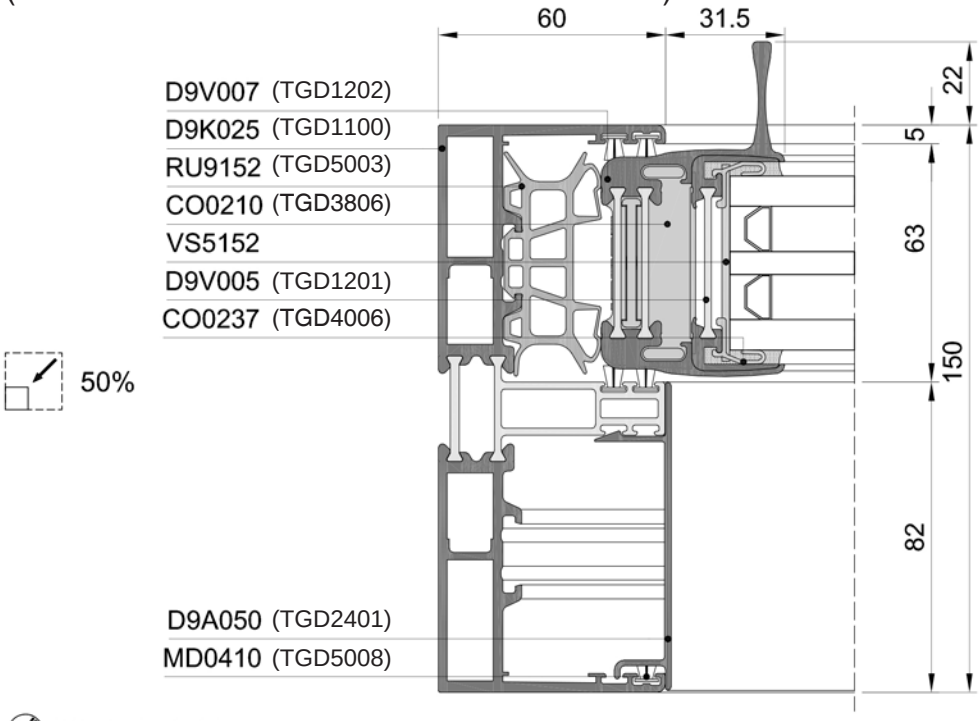

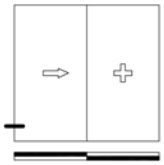

ART2-SEC-109

D9V005/D9V004-D9K025+CO0237 (46 MM) - RIGHT
(TGD1201 / TGD1200 - TGD1100 + TGD4006)

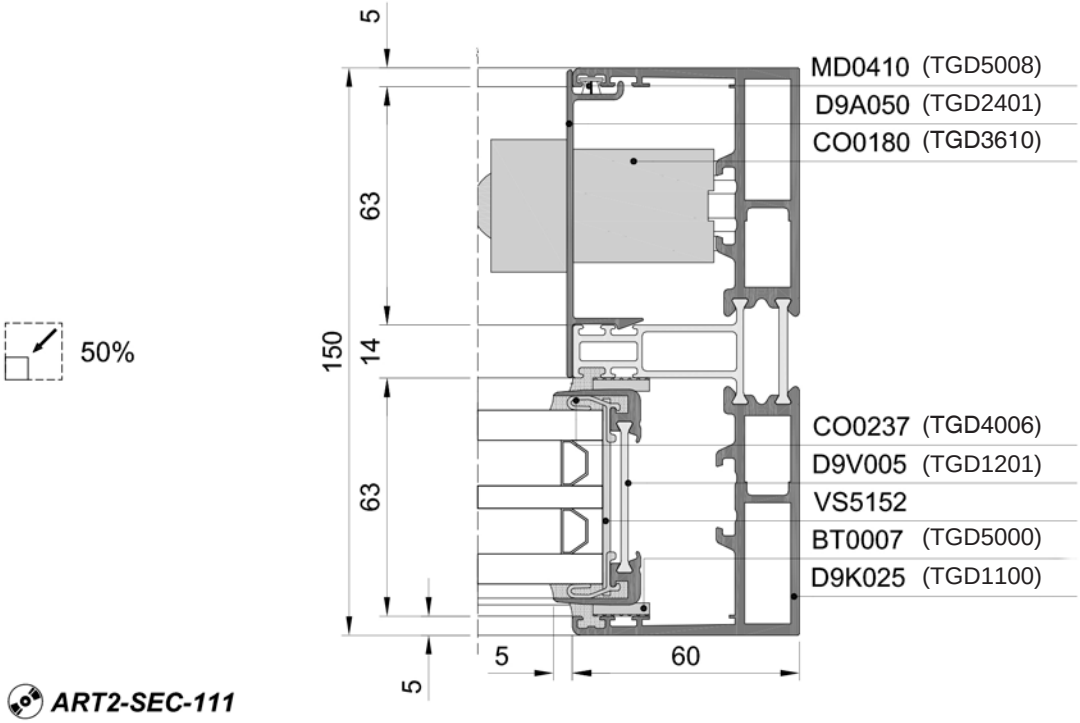

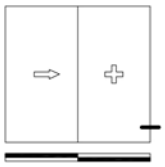

ART2-SEC-111

Sections

2-Rail - Slide-Fix

TECHNAL®

D9V005/D9V004-D9V113+CO0237 (46 MM) - MIDDLE
(TGD1201 / TGD1200 - TGD2200 + TGD4006)

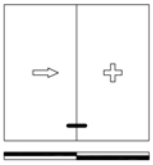

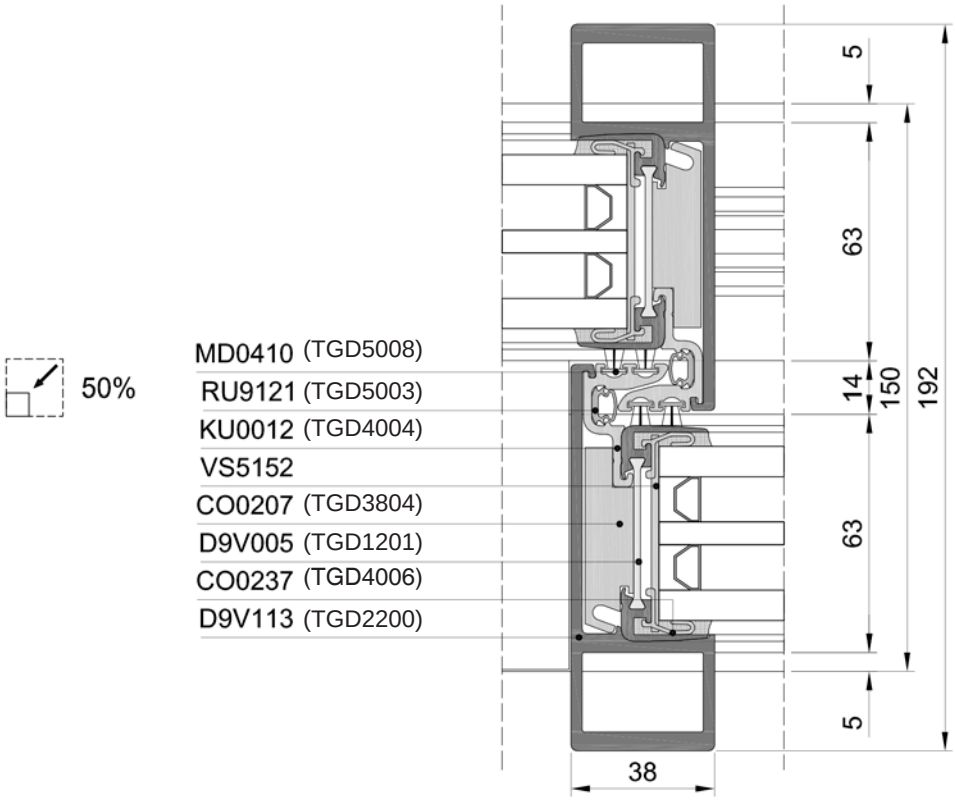

D9V005/D9V004-D9K025 - TOP LEFT
(TGD1201 / TGD1200 - TGD1100)

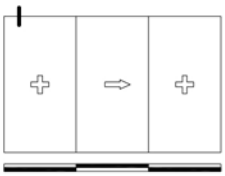

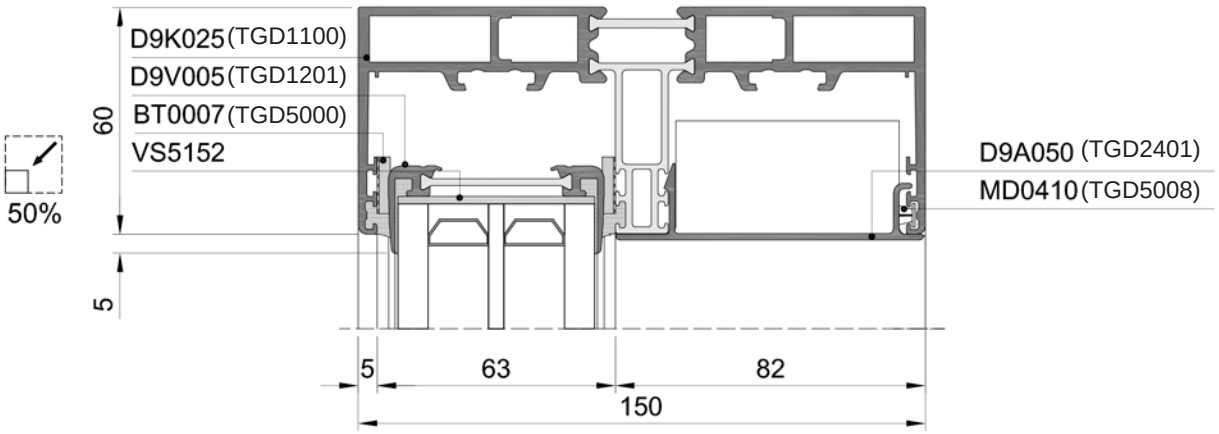

ART2-SEC-059

D9V005/D9V004-D9K029 - BOTTOM LEFT
(TGD1201 / TGD1200 - TGD1101)

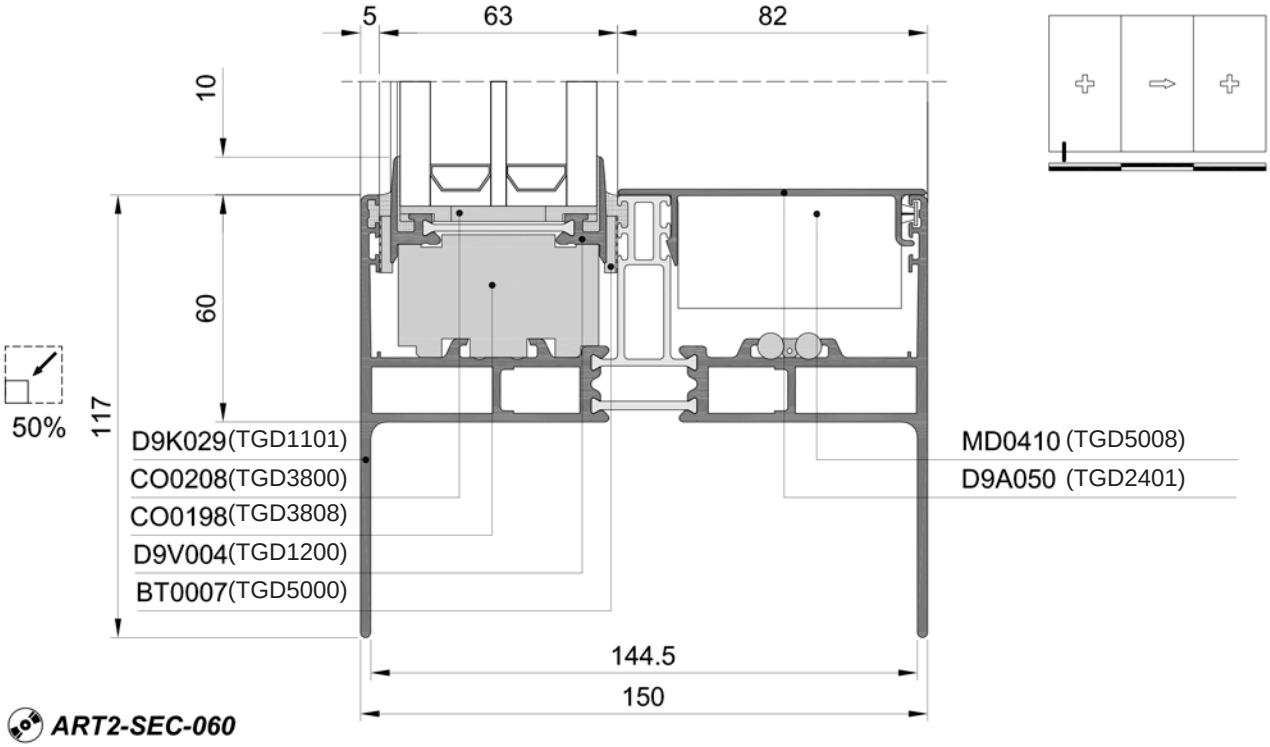

ART2-SEC-060

Sections

2-Rail - Fix - Slide - Fix

D9V005/D9V004-D9K025 - TOP
(TGD1201 / TGD1200 - TGD1100)

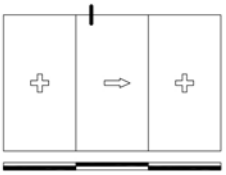

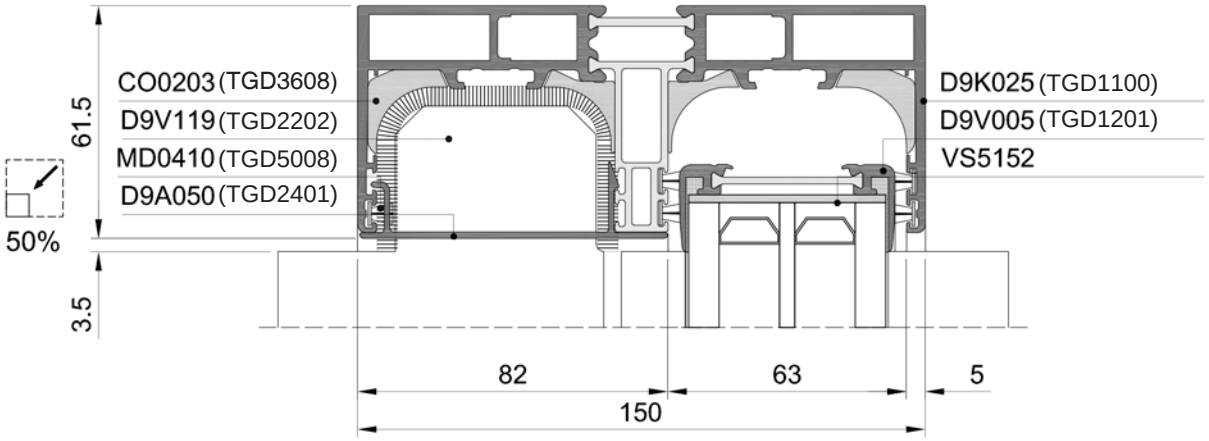

ART2-SEC-061

D9V005/D9V004-D9K029 - BOTTOM
(TGD1201 / TGD1200 - TGD1101)

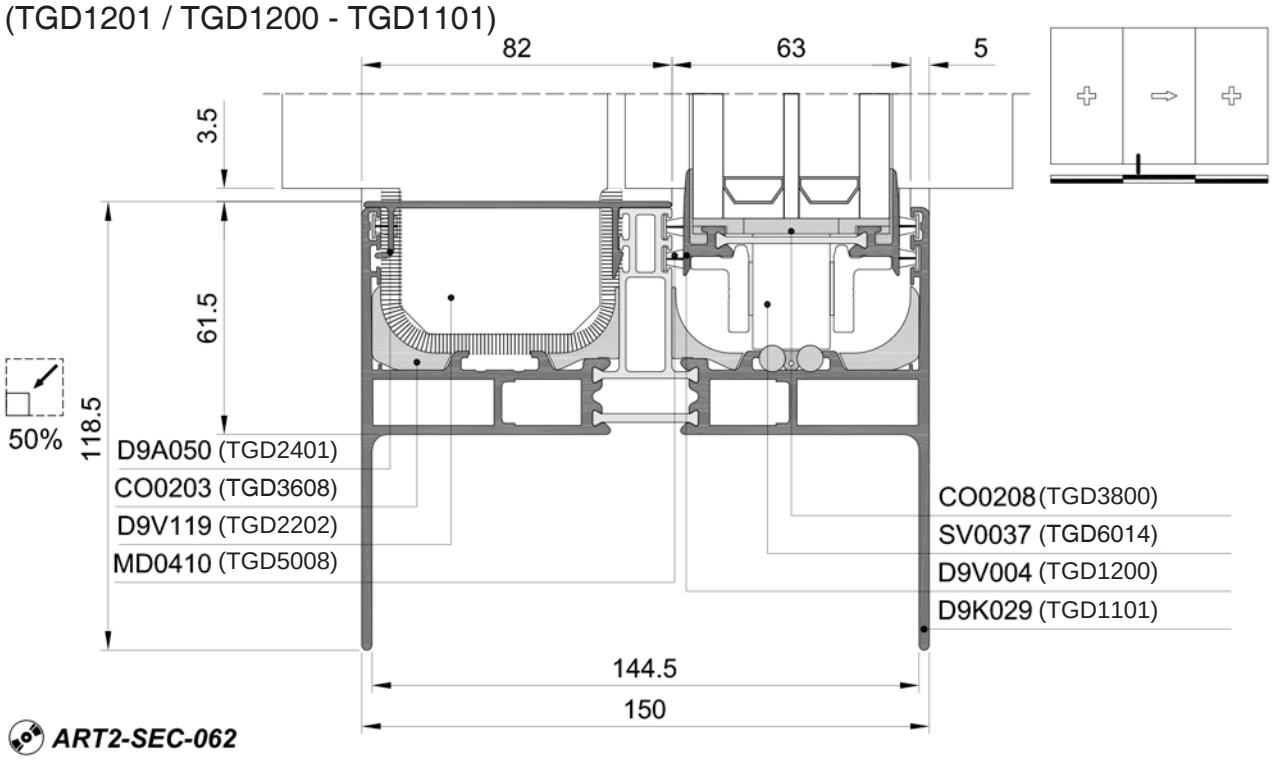

ART2-SEC-062

D9V005/D9V004-D9K025 - LEFT
(TGD1201 / TGD1200 - TGD1100)

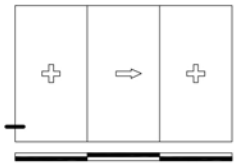

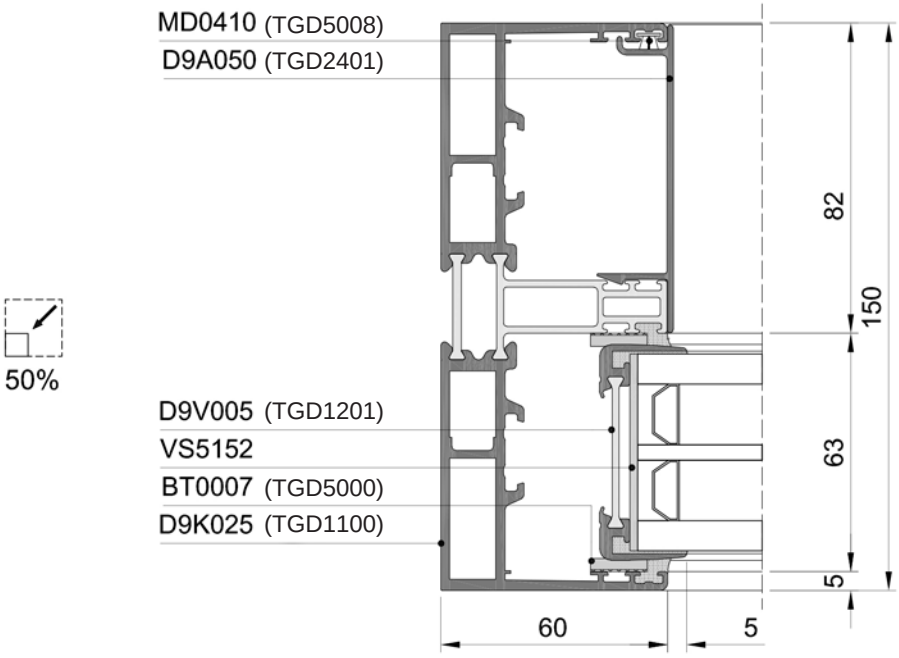

ART2-SEC-063

KU0015/D9V004-D9K025 - TOP LEFT
(TGD4005 / TGD1200 - TGD1100)

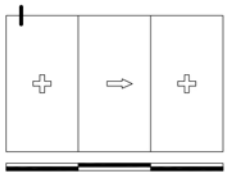

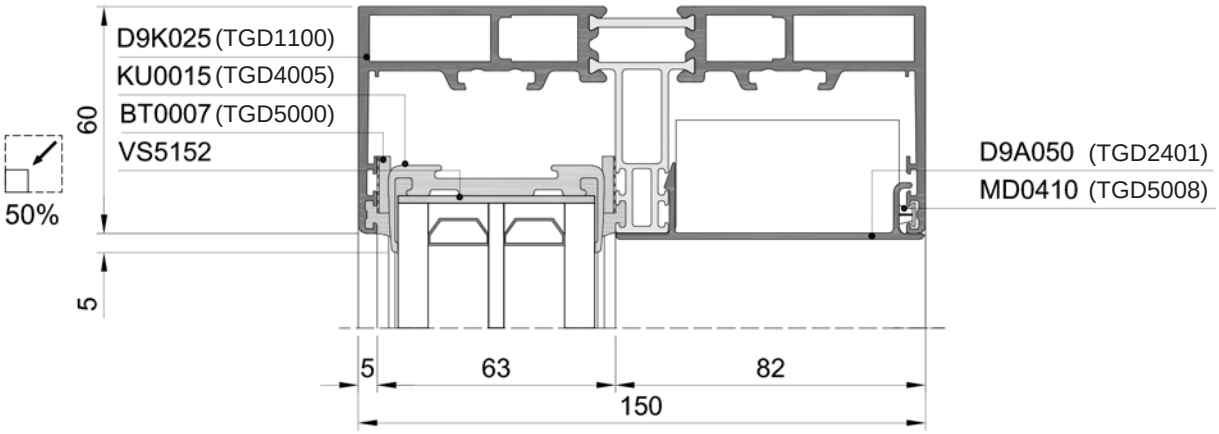

ART2-SEC-064

Sections

2-Rail - Fix - Slide - Fix

TECHNAL®

KU0015/D9V004-D9K025 - TOP
(TGD4005 / TGD1200 - TGD1100)

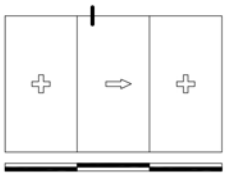

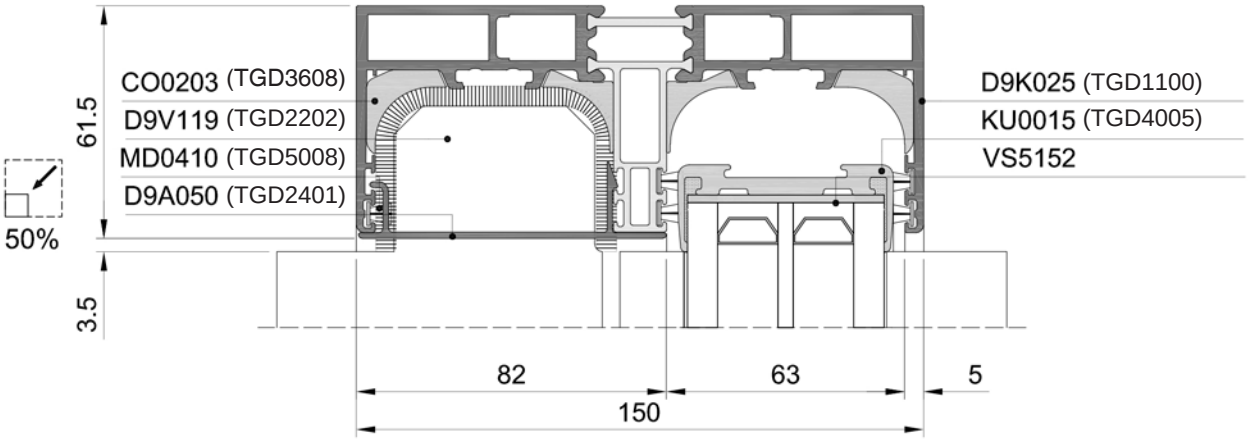

ART2-SEC-065

KU0015/D9V004-D9K025 - LEFT
(TGD4005 / TGD1200 - TGD1100)

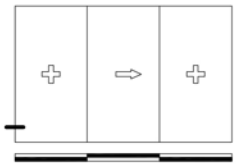

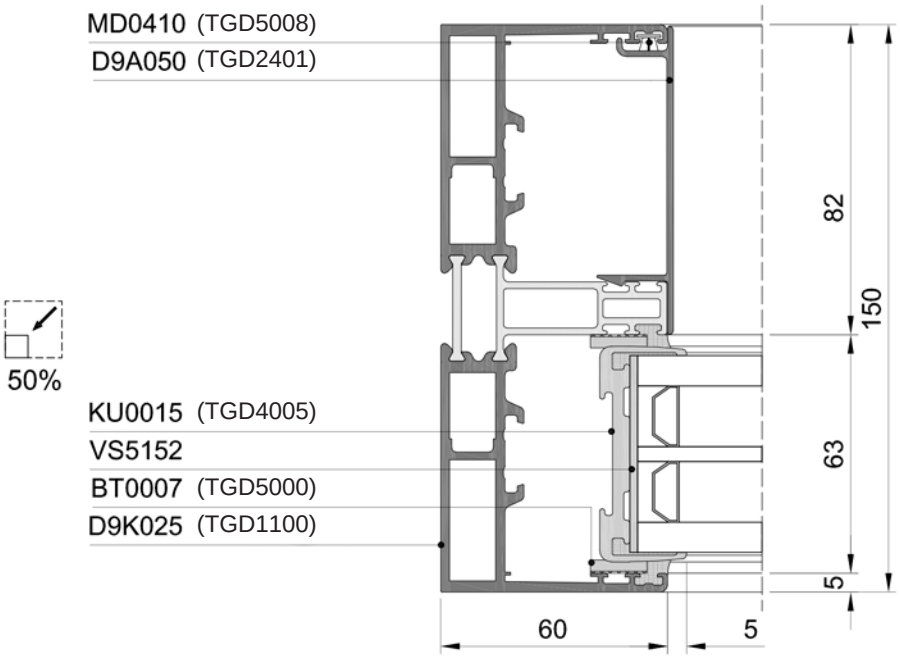

ART2-SEC-066

KU0015/D9V004-D9V119 - MIDDLE
(TGD4005 / TGD1200 - TGD2202)

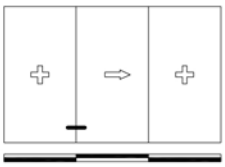

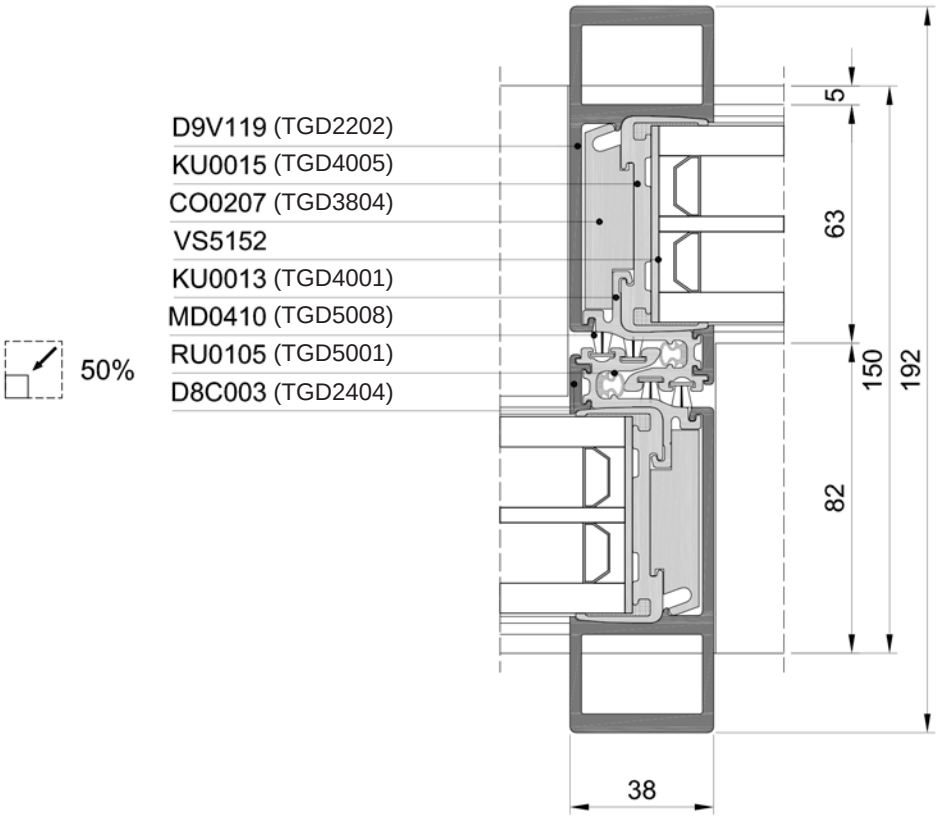

ART2-SEC-067

Sections

2-Rail - Fix - Slide - Fix

TECHNAL®

D9V005/D9V119 - MIDDLE

(TGD1201 / TGD2202)

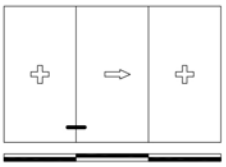

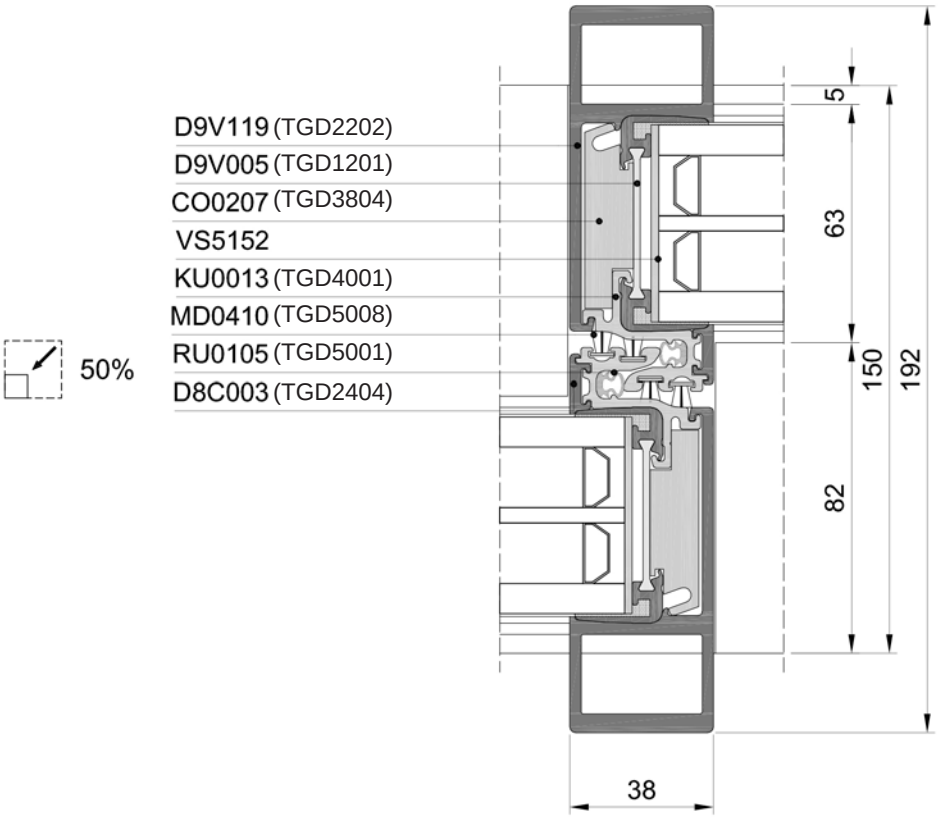

D9T001 - MIDDLE

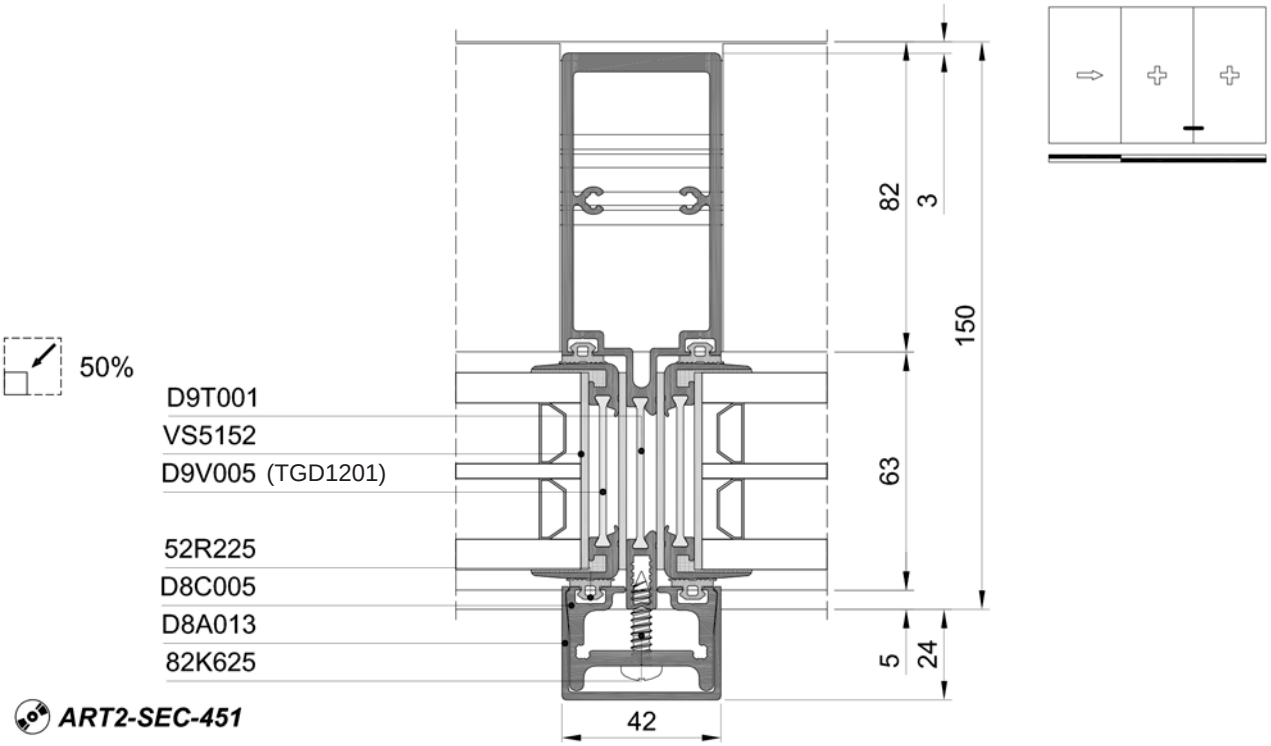

ART2-SEC-451

D9T001 - MIDDLE

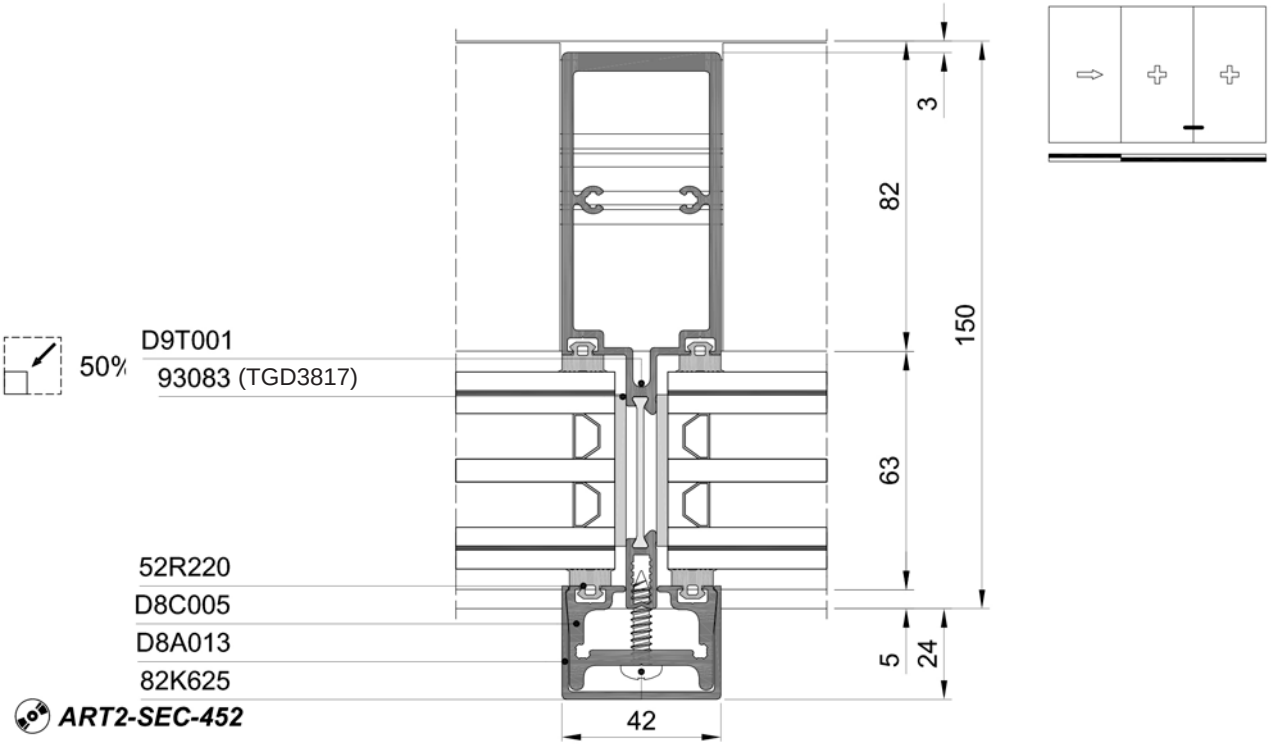

ART2-SEC-452

Sections

3-Rail

TECHNAL®

D9V004/D9V005-D9K035 - TOP RIGHT
(TGD1200 / TGD1201 - TGD1102)

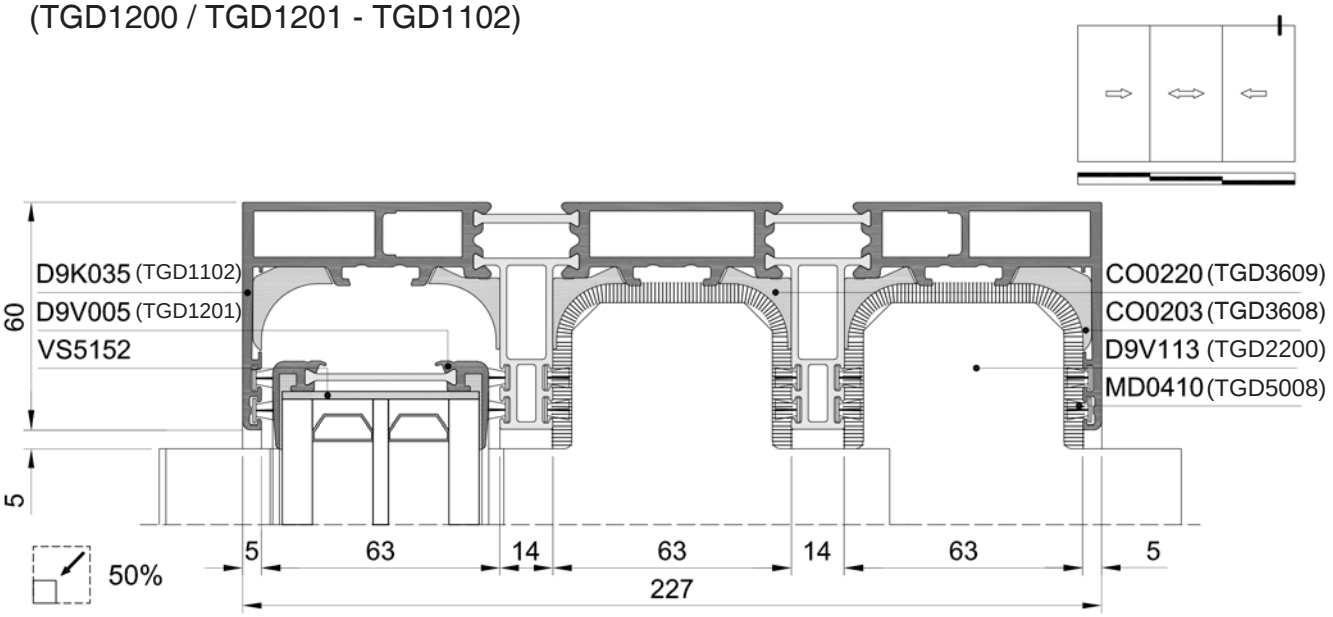

ART2-SEC-085

D9V004/D9V005-D9K039 - BOTTOM RIGHT
(TGD1200 / TGD1201 - TGD1103)

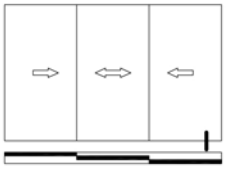

50%

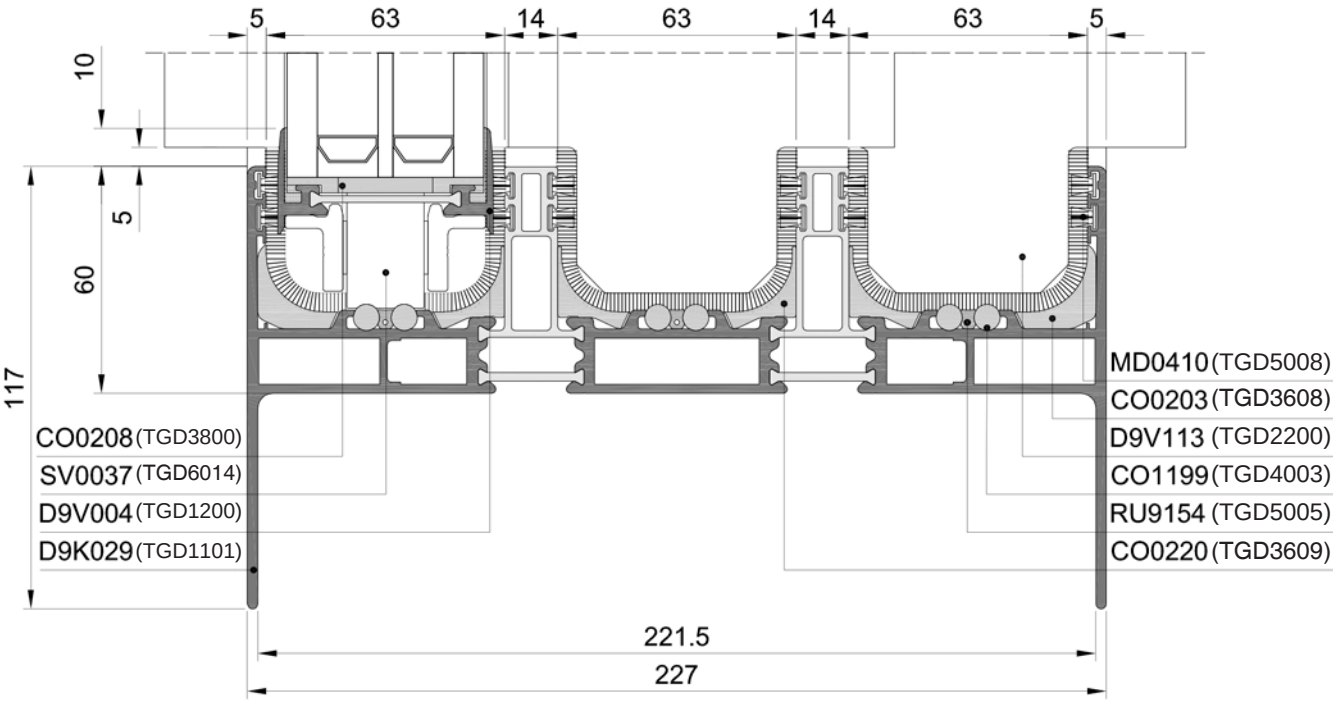

ART2-SEC-086

Sections

3-Rail

TECHNAL®

D9V004/D9V005-D9K035 - LEFT
(TGD1200 / TGD1201 - TGD1102)

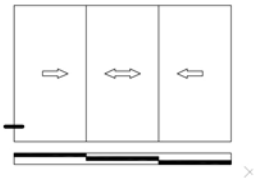

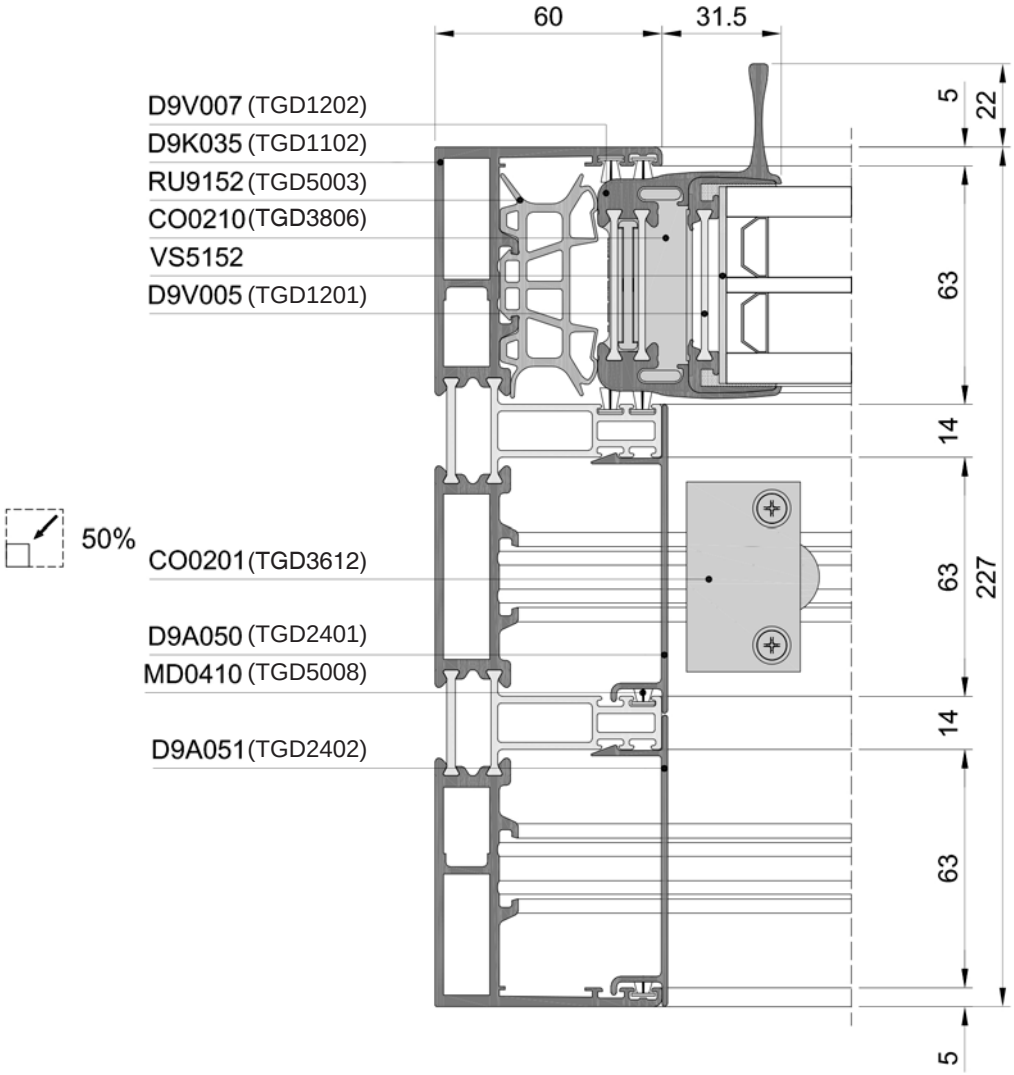

D9V004/D9V005-D9V113 - MIDDLE
(TGD1200 / TGD1201 - TGD2200)

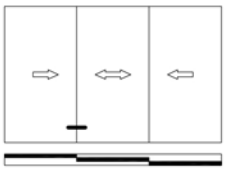

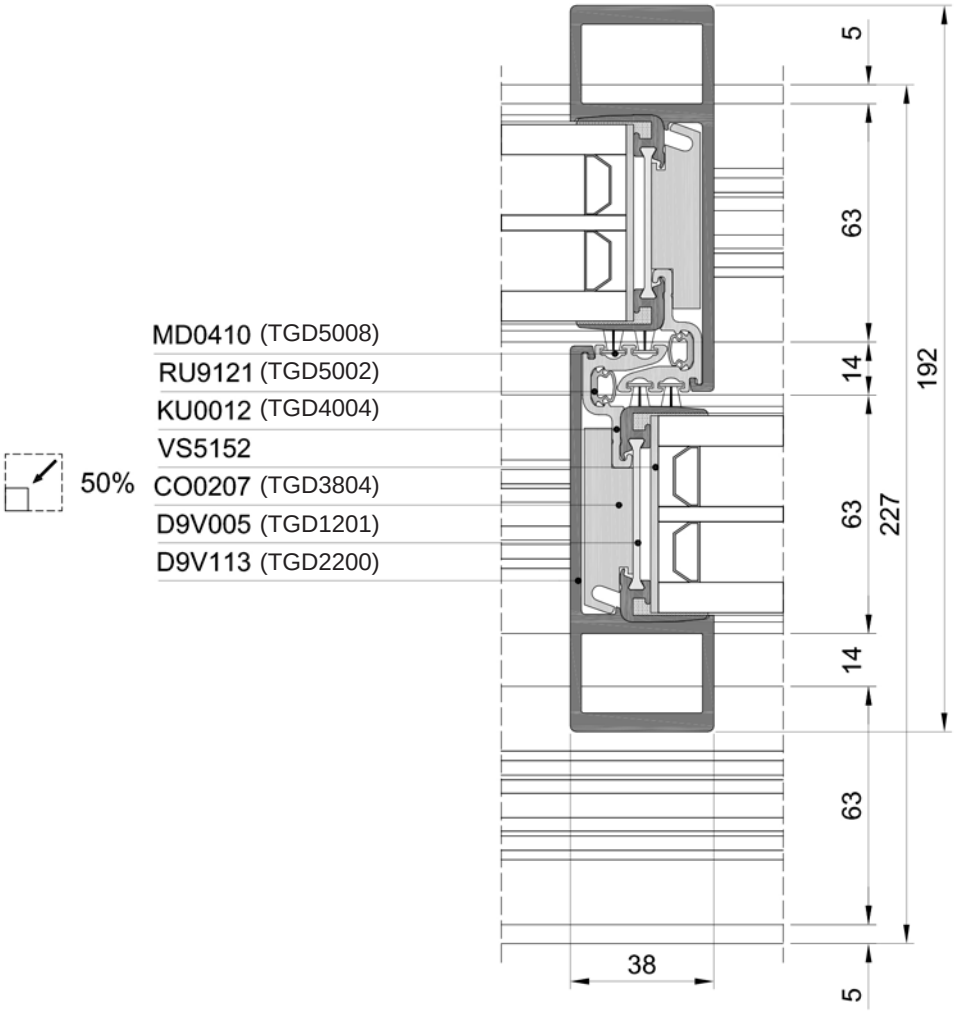

ART2-SEC-087

Sections

3-Rail

TECHNAL®

D9V004/D9V005-D9V113 - MIDDLE
(TGD1200 / TGD1201 - TGD2200)

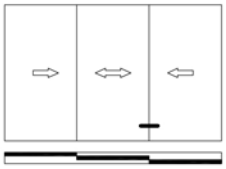

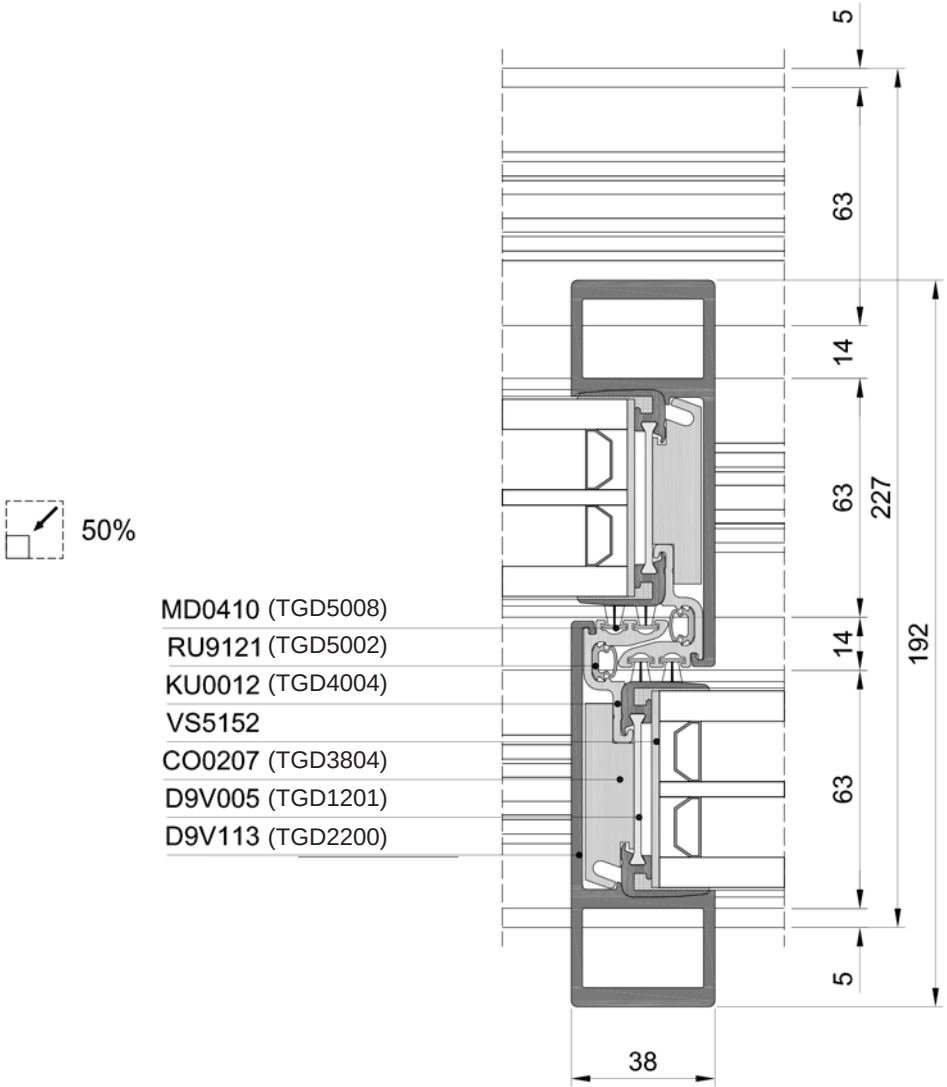

ART2-SEC-088

D9V004/D9V005-D9K035 - RIGHT
(TGD1200 / TGD1201 - TGD1102)

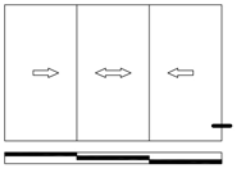


50%

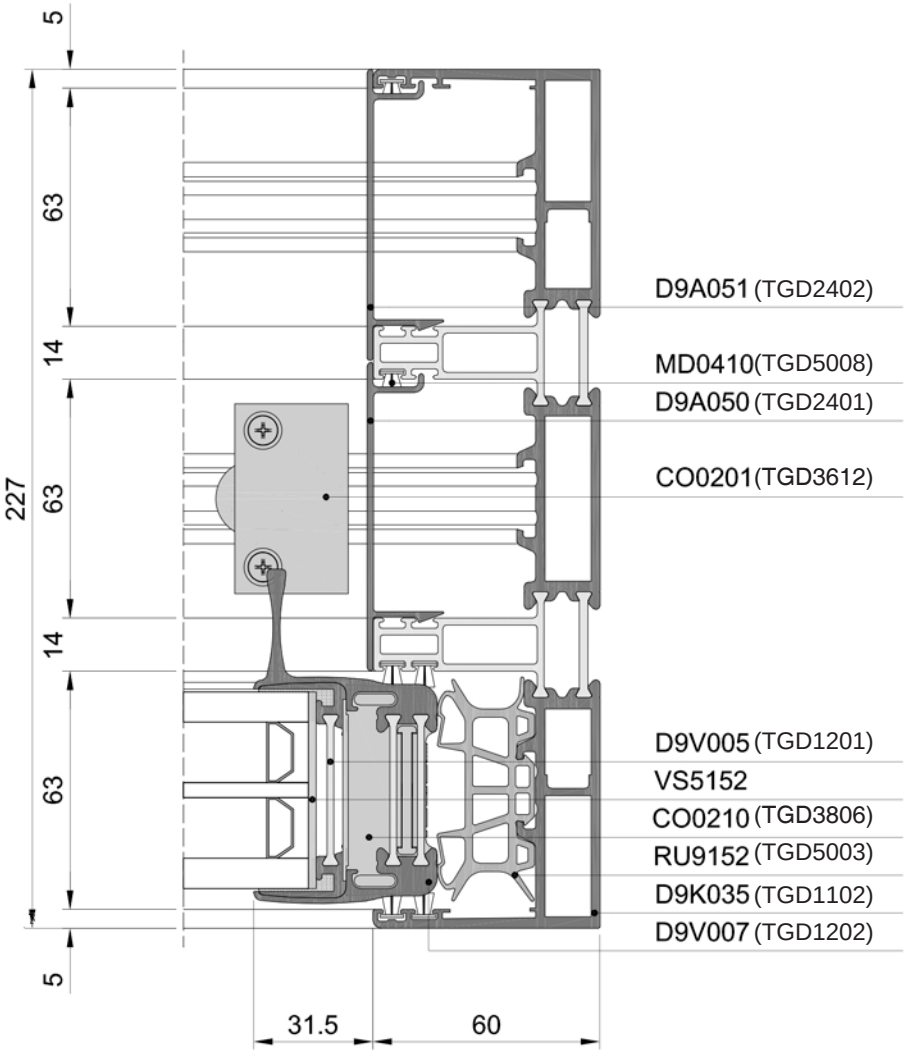

ART2-SEC-089

Sections

3-Rail

TECHNAL®

KU0015/D9V004-D9K035 - TOP RIGHT
(TGD4005 / TGD1200 - TGD1102)

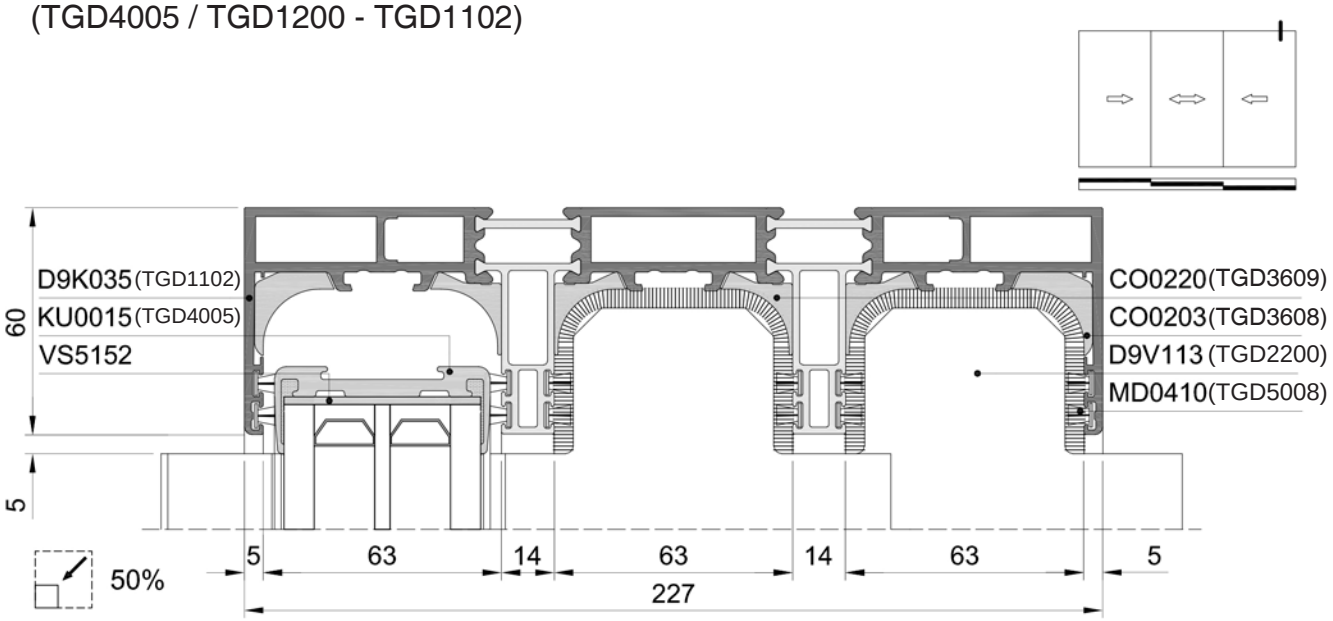

ART2-SEC-090

KU0015/D9V004-D9K035 - LEFT
(TGD4005 / TGD1200 - TGD1102)

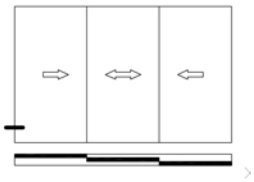

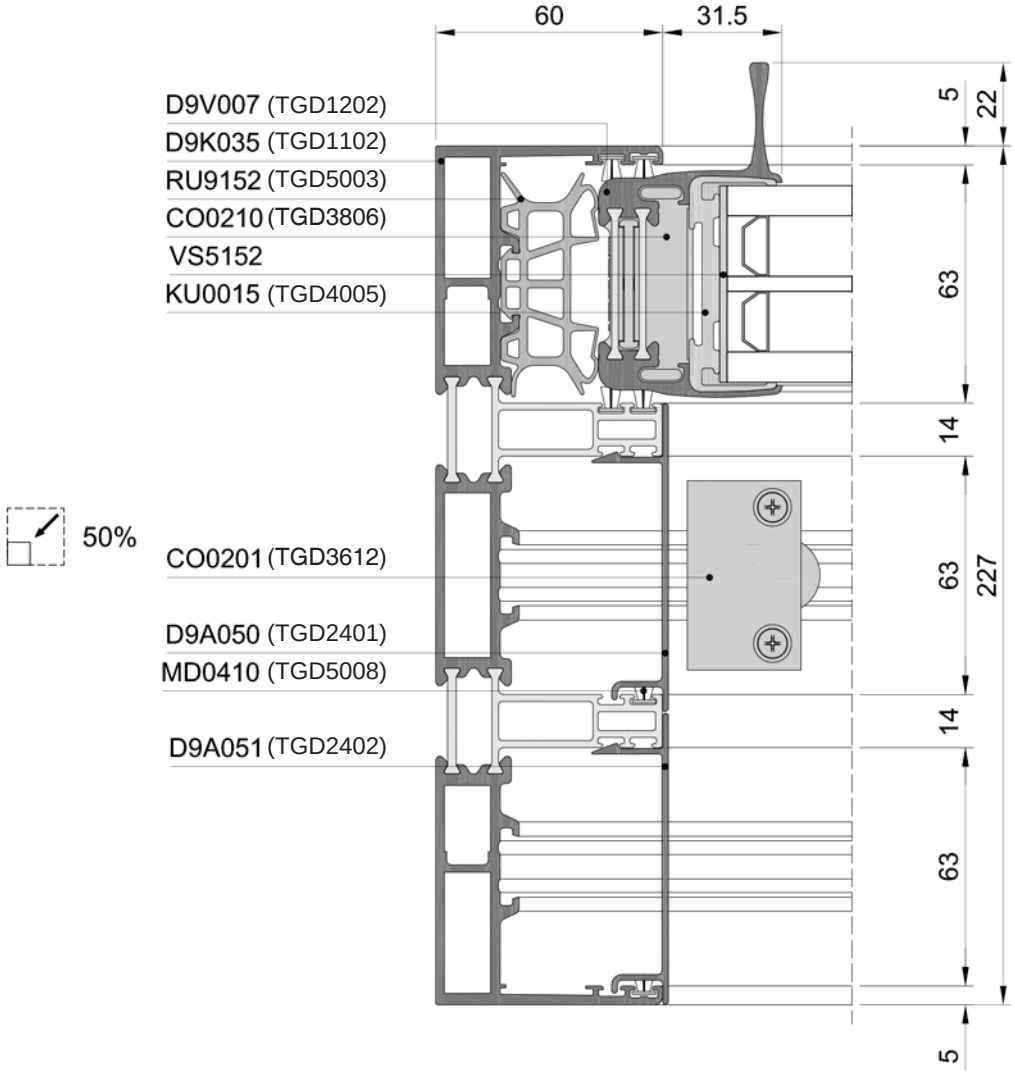

ART2-SEC-091

Sections

3-Rail

TECHNAL®

KU0015/D9V004-D9V113 - MIDDLE
(TGD4005 / TGD1200 - TGD2200)

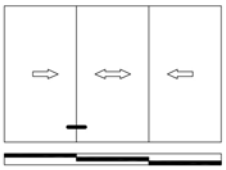

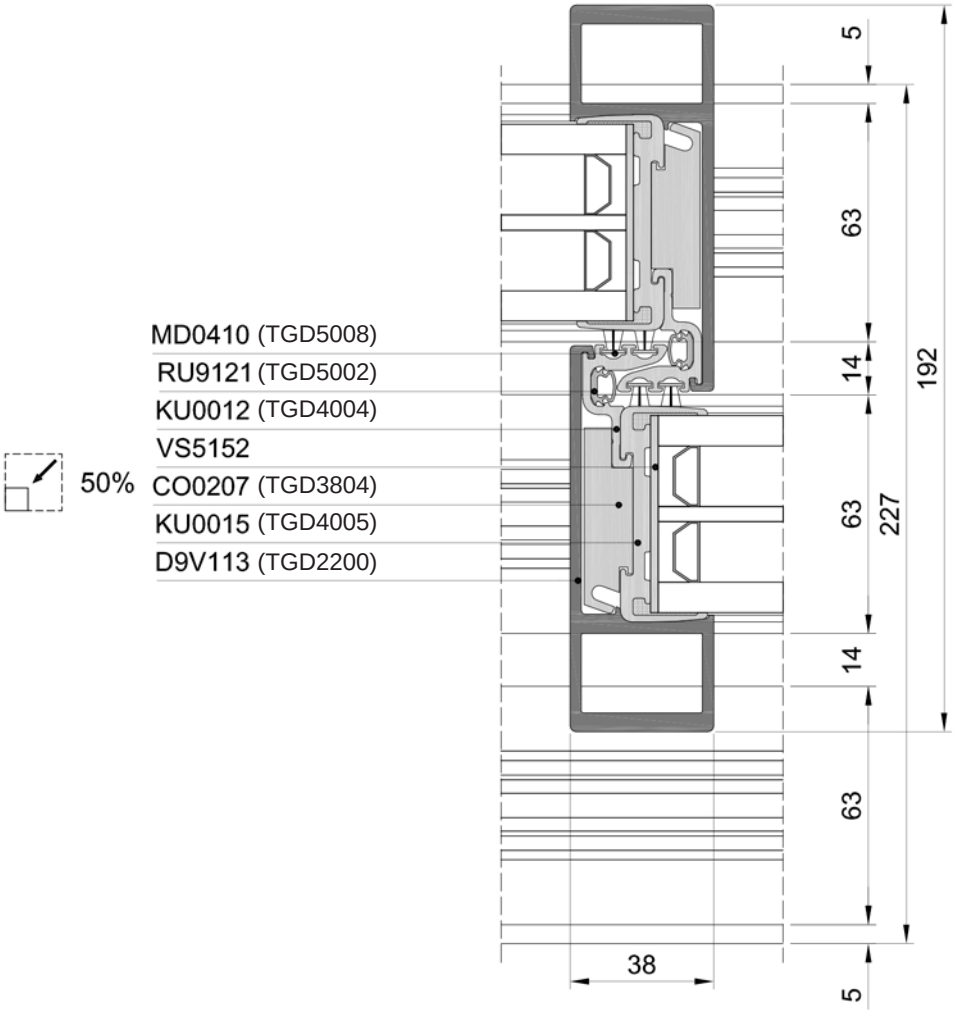

ART2-SEC-092

KU0015/D9V004-D9V113 - MIDDLE
(TGD4005 / TGD1200 - TGD2200)

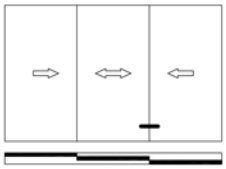

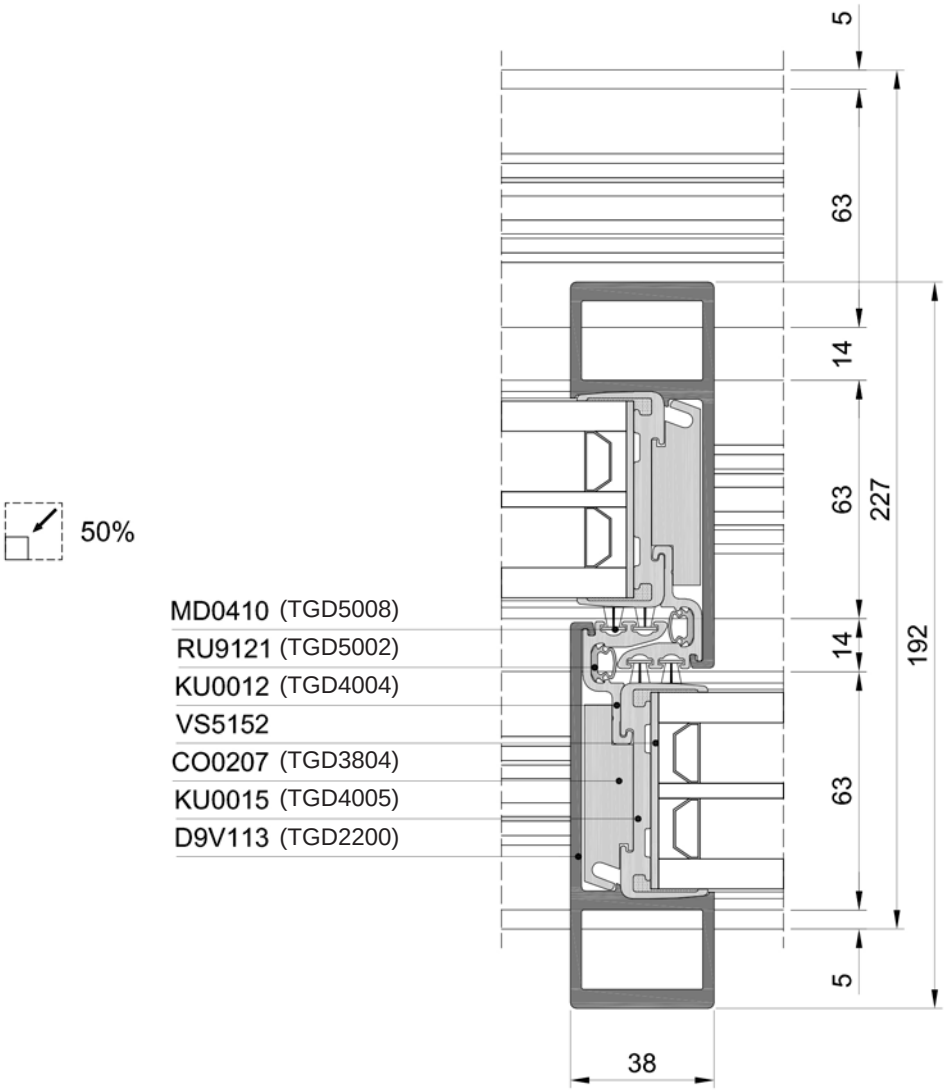

ART2-SEC-093

Sections

3-Rail

TECHNAL®

KU0015/D9V004-D9K035 - RIGHT
(TGD4005 / TGD1200 - TGD1102)

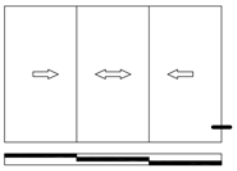

50%

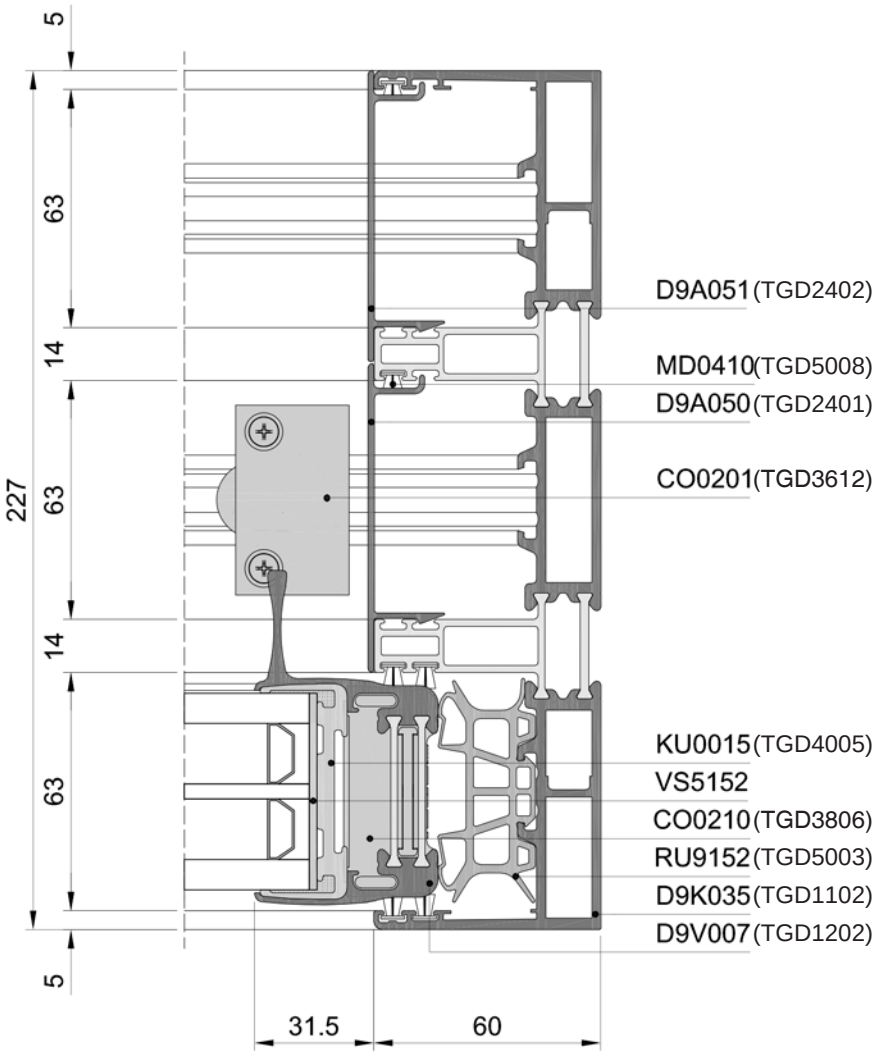

ART2-SEC-094

D9V005/D9V007
(TGD1201 / TGD1202)

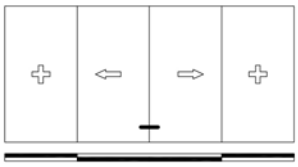

50%

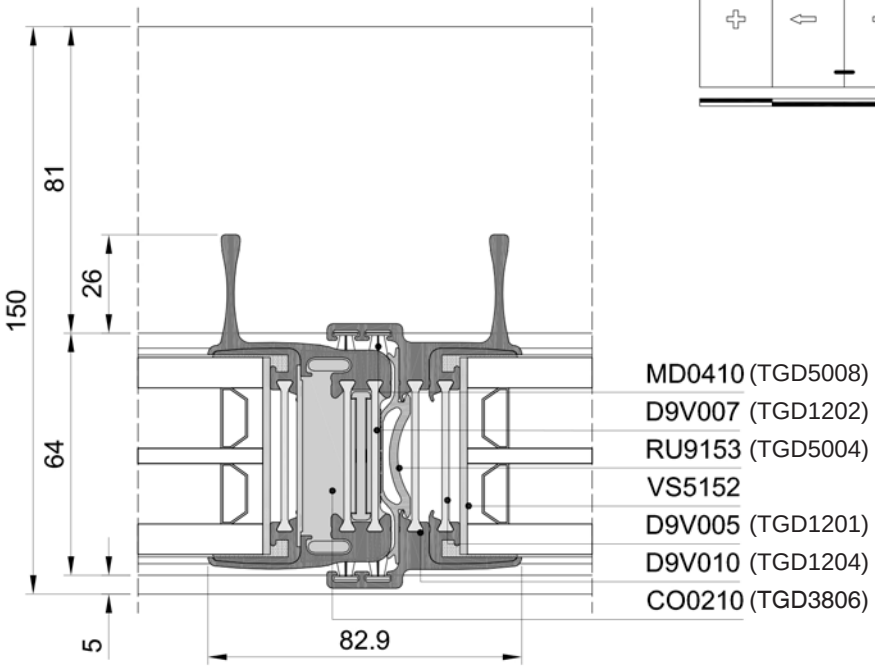

ART2-SEC-301

D9V005/D9V008
(TGD1201 / TGD1203)

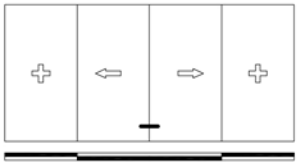

50%

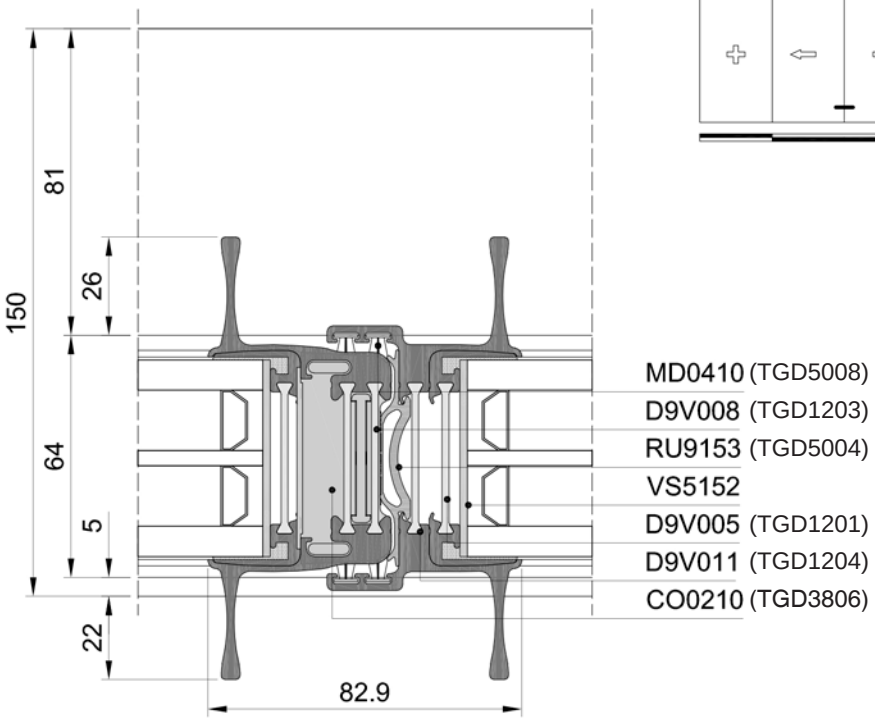

ART2-SEC-073

Sections

2-Rail - 4 Vents

D9V005/D9V031
(TGD1201 / TGD1206)

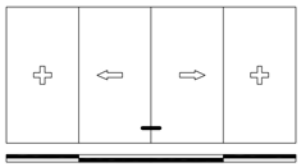

50%

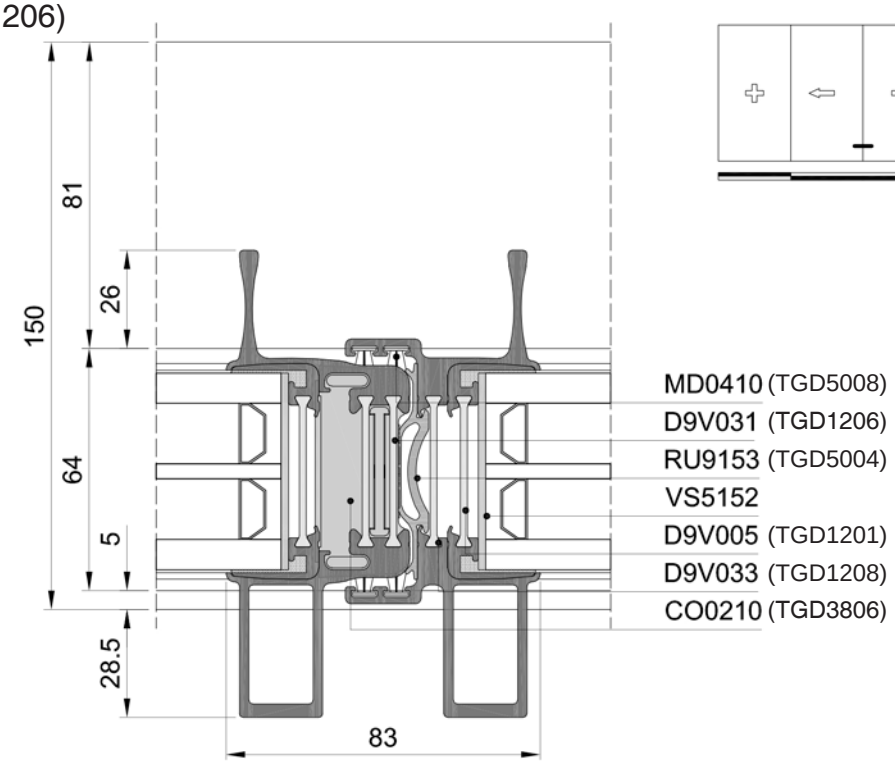

ART2-SEC-074

D9V005/D9V032/D9V034
(TGD1201 / TGD1207 / TDG1209)

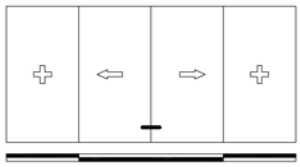

50%

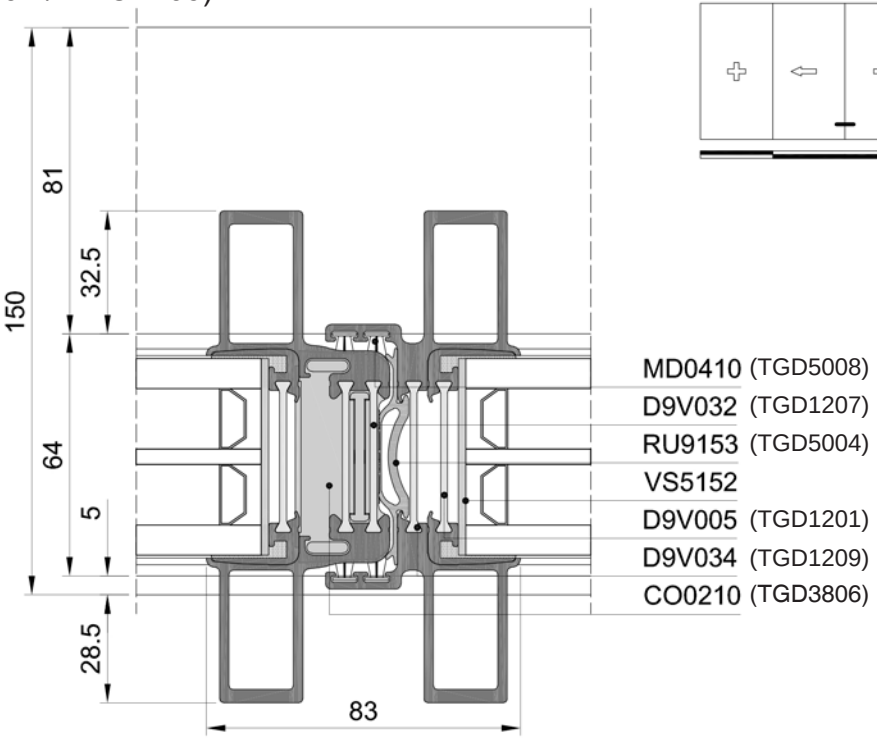

ART2-SEC-302

KU0015/D9V007/D9V010
(TGD4005 / TGD1202 / TGD1204)

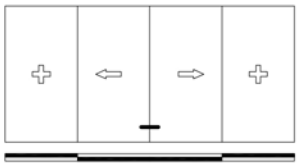

50%

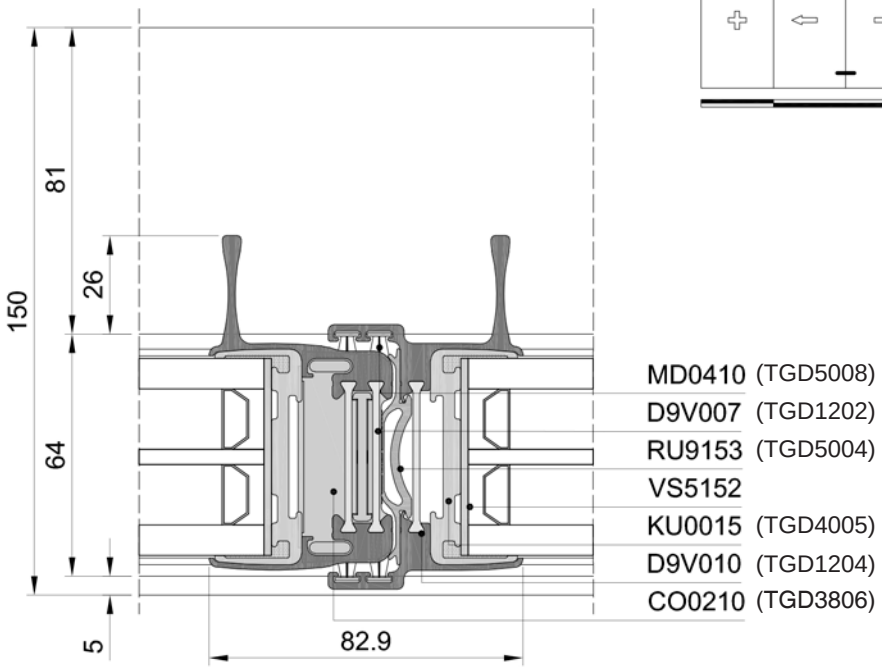

ART2-SEC-075

KU0015/D9V008/D9V011
(TGD4005 / TGD1203 / TGD1205)

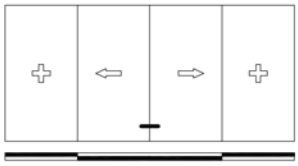

50%

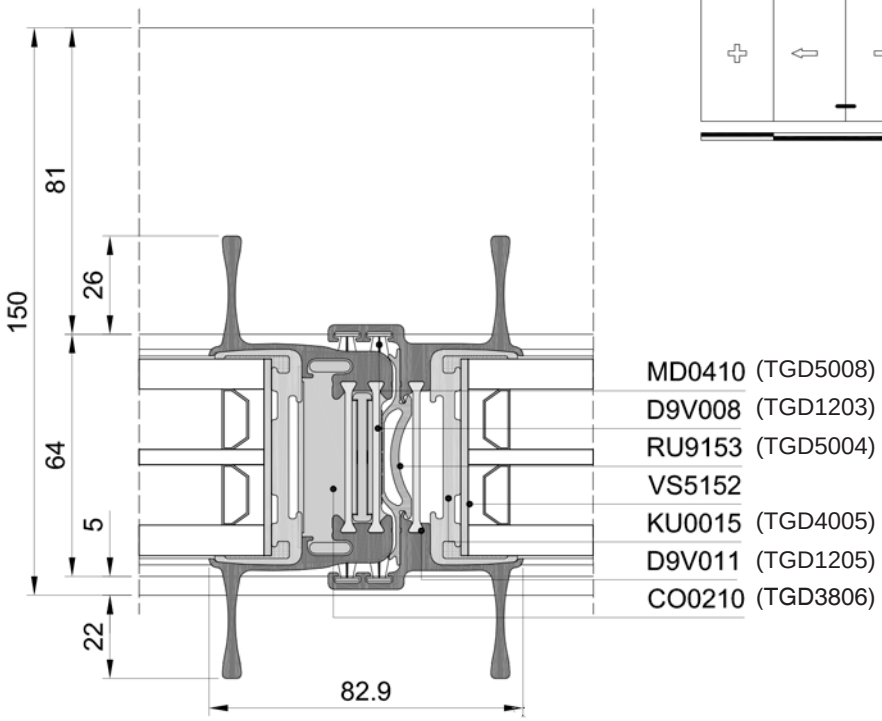

ART2-SEC-076

Sections

2-Rail - 4 Vents

KU0015/D9V031/D9V033
(TGD4005 / TGD1206 / TGD1208)

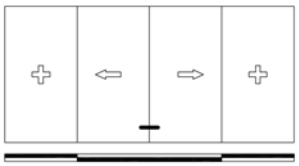

50%

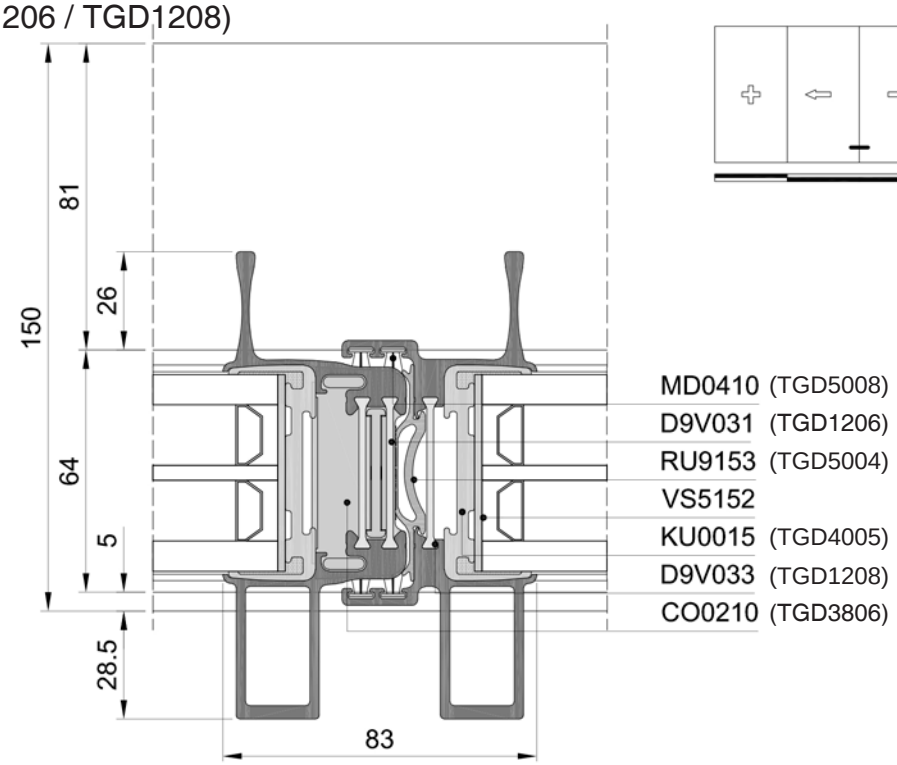

ART2-SEC-077

KU0015/D9V032/D9V034
(TGD4005 / TGD1207 / TGD1209)

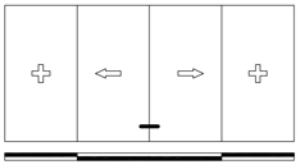

50%

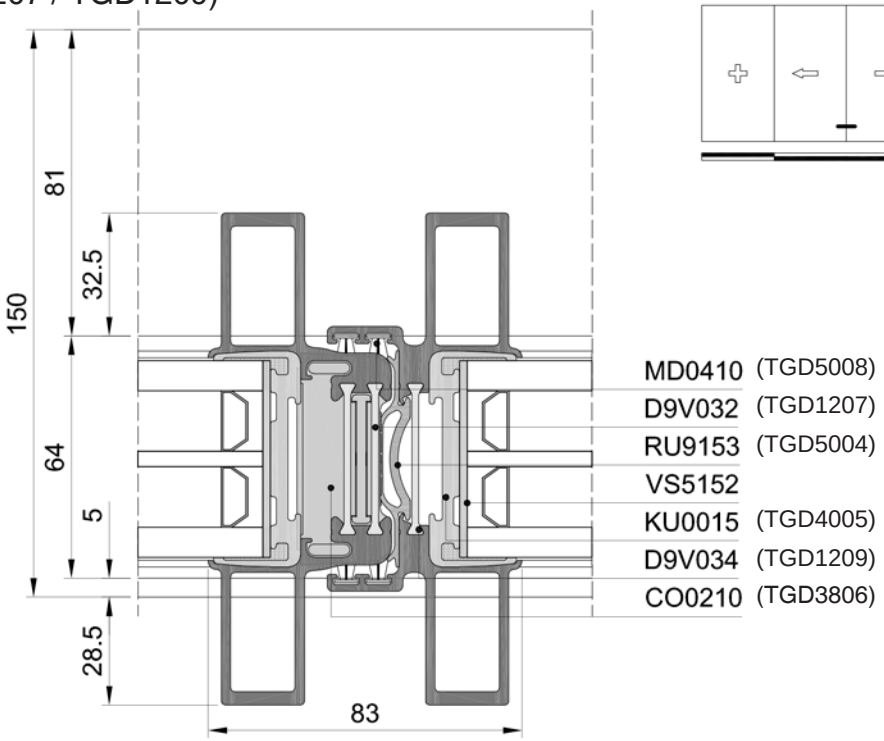

ART2-SEC-078

D9V005/D9V007 - INSIDE
(TGD1201 / TGD1202)

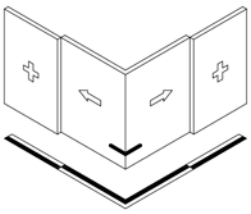

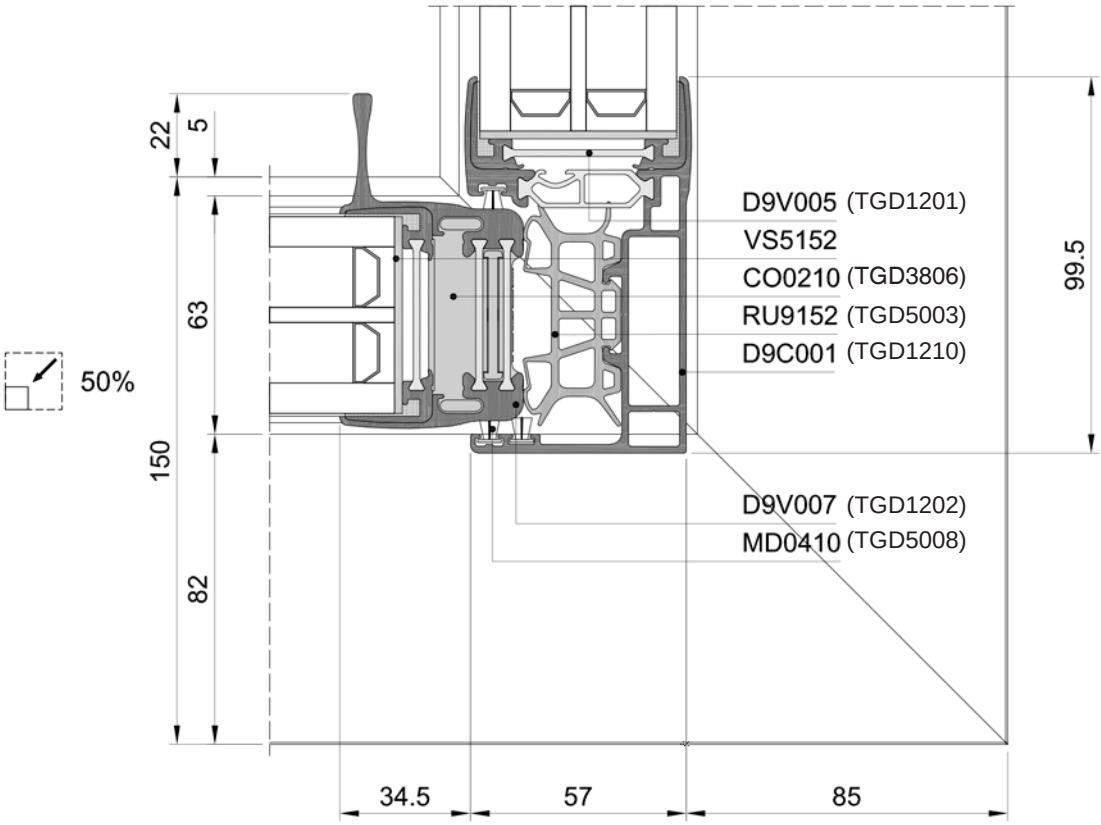

Sections

Corner solution

TECHNAL®

KU0015/D9V007 - INSIDE
(TGD4005 / TGD1202)

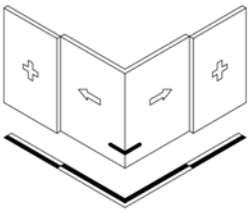

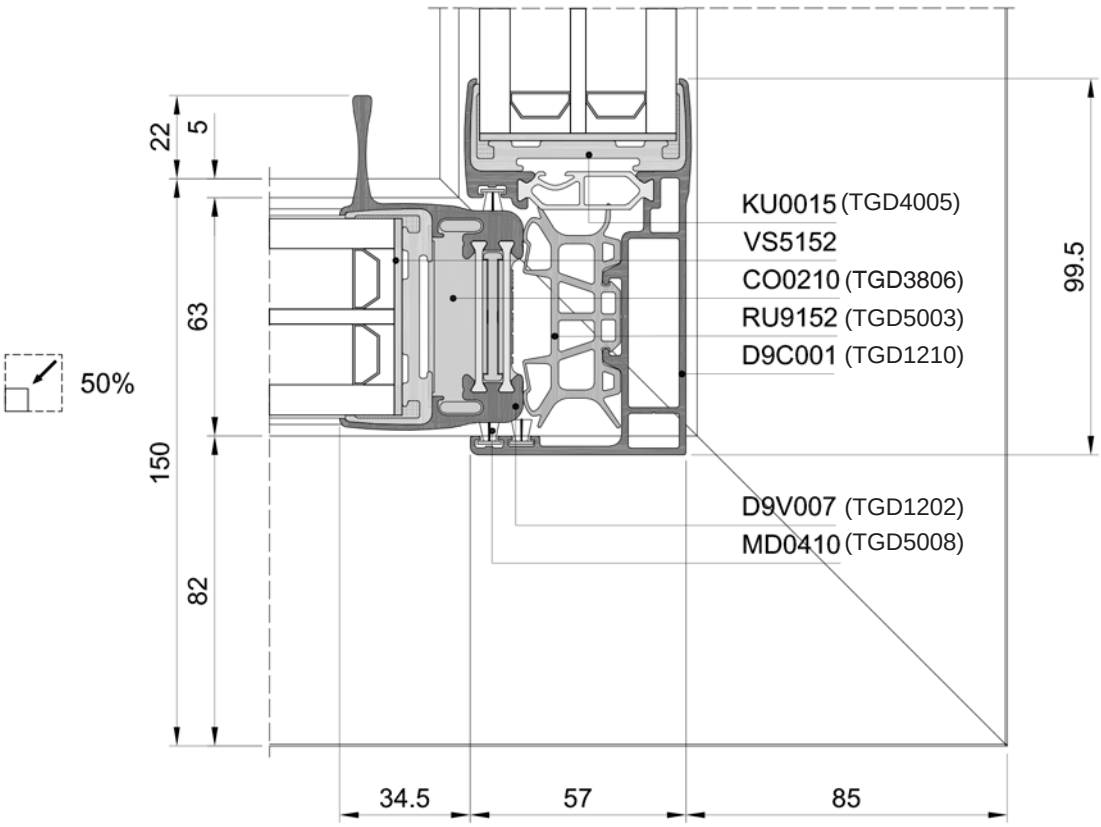

ART2-SEC-079

D9V005/D9V007 - OUTSIDE
(TGD1201 / TGD1202)

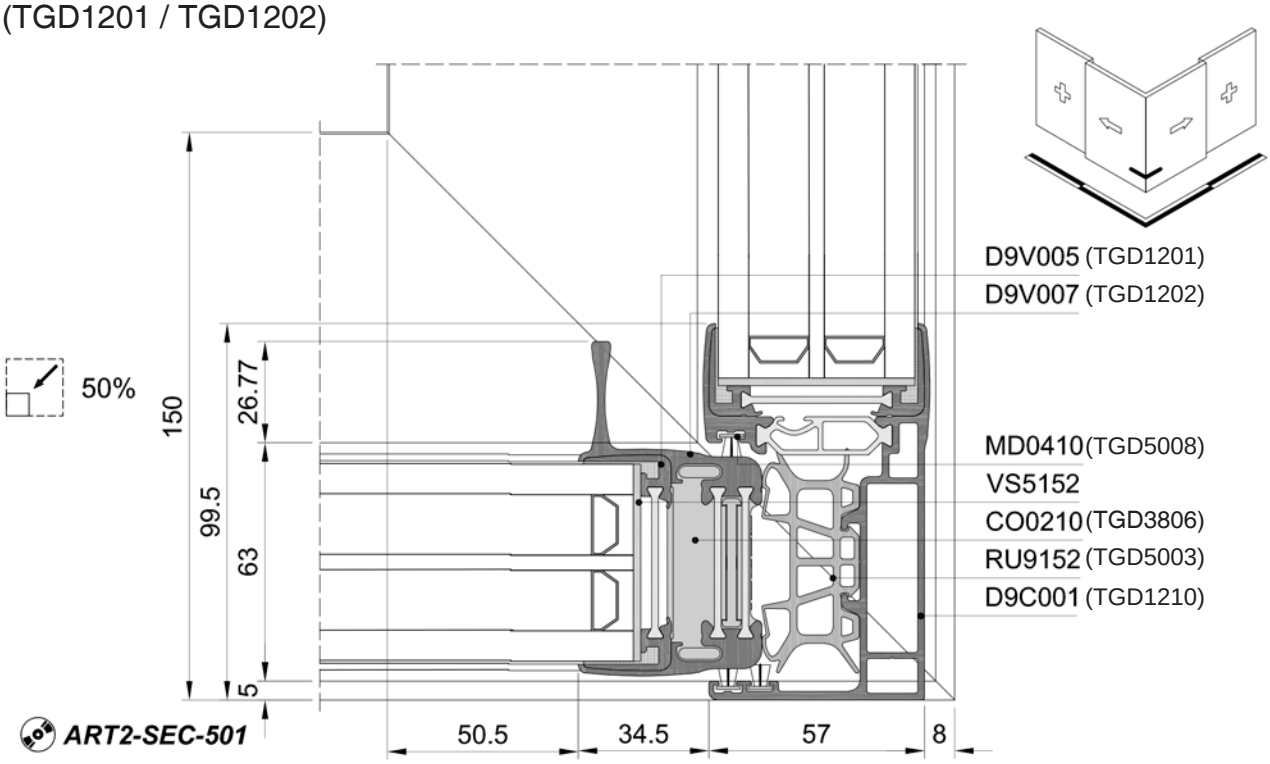

D9V005/D9V007 - OUTSIDE
(TGD1201 / TGD1202)

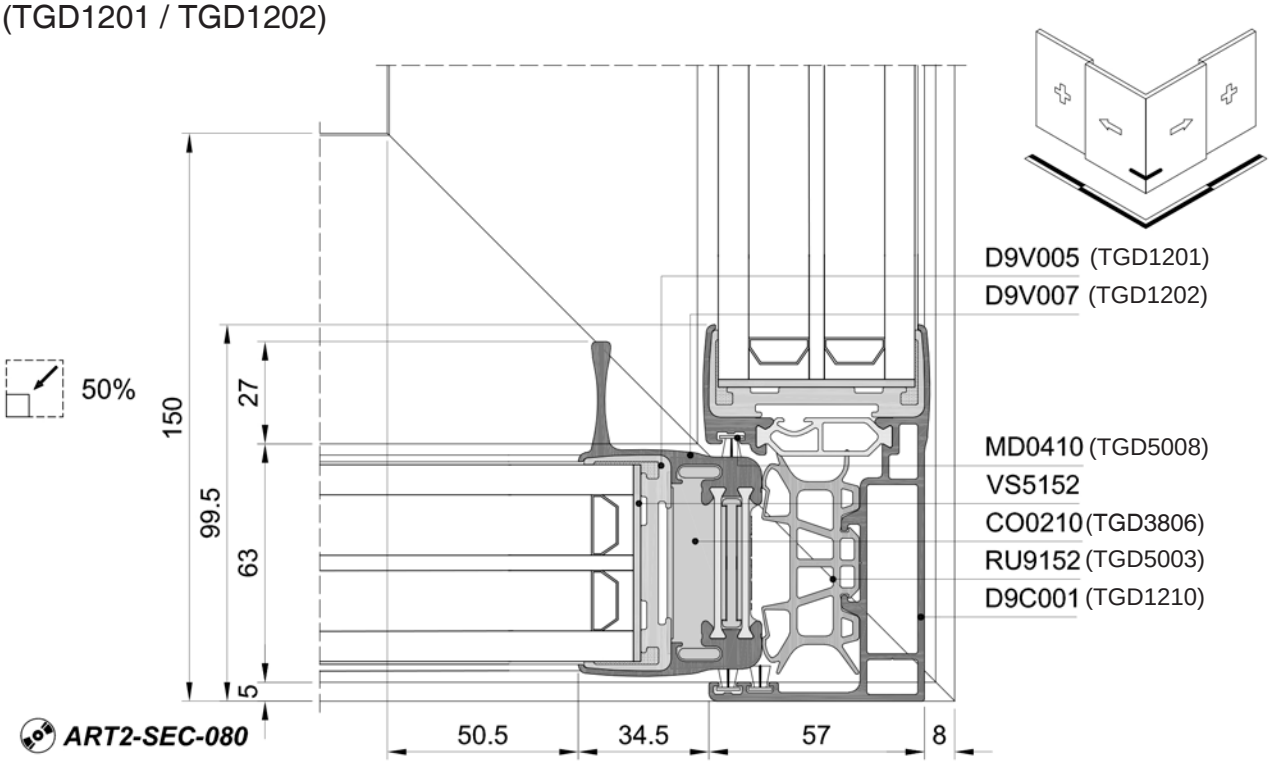

Sections

Various

TECHNAL®

D9V004/D9V005-D9K025 - TOP
(TGD1200 / TGD1201 - TGD1100)

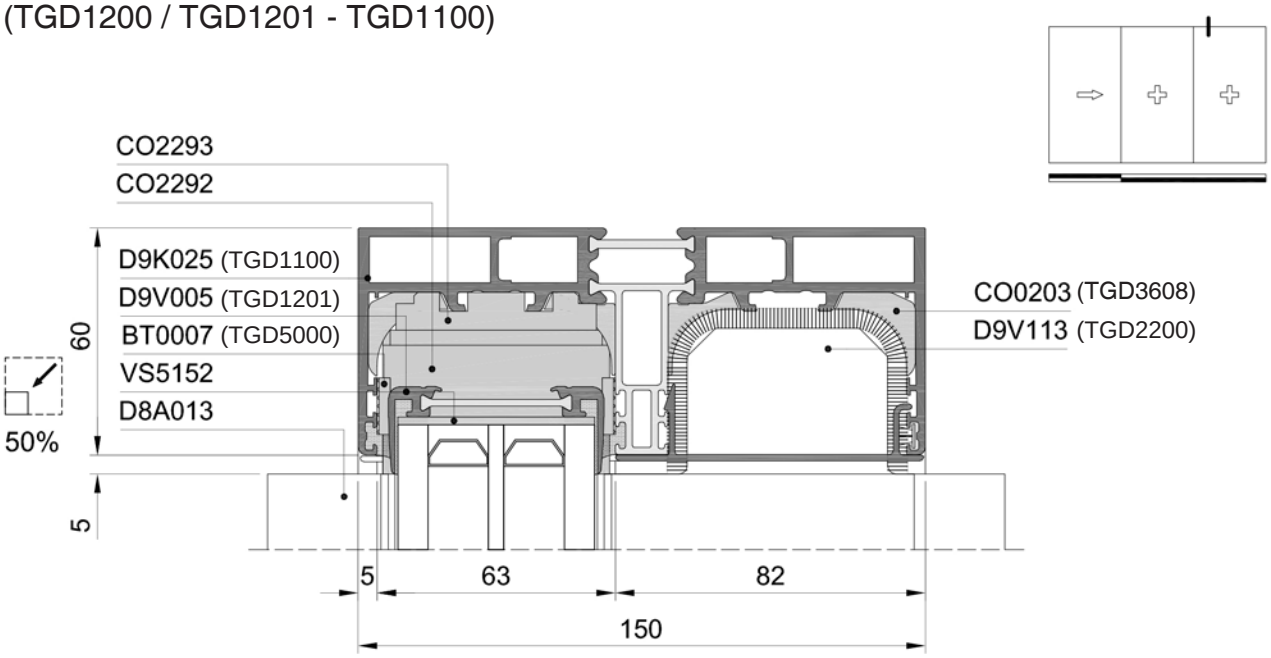

ART2-SEC-081

D9V004/D9V005-D9K029 - BOTTOM
(TGD1200 / TGD1201 - TGD1101)

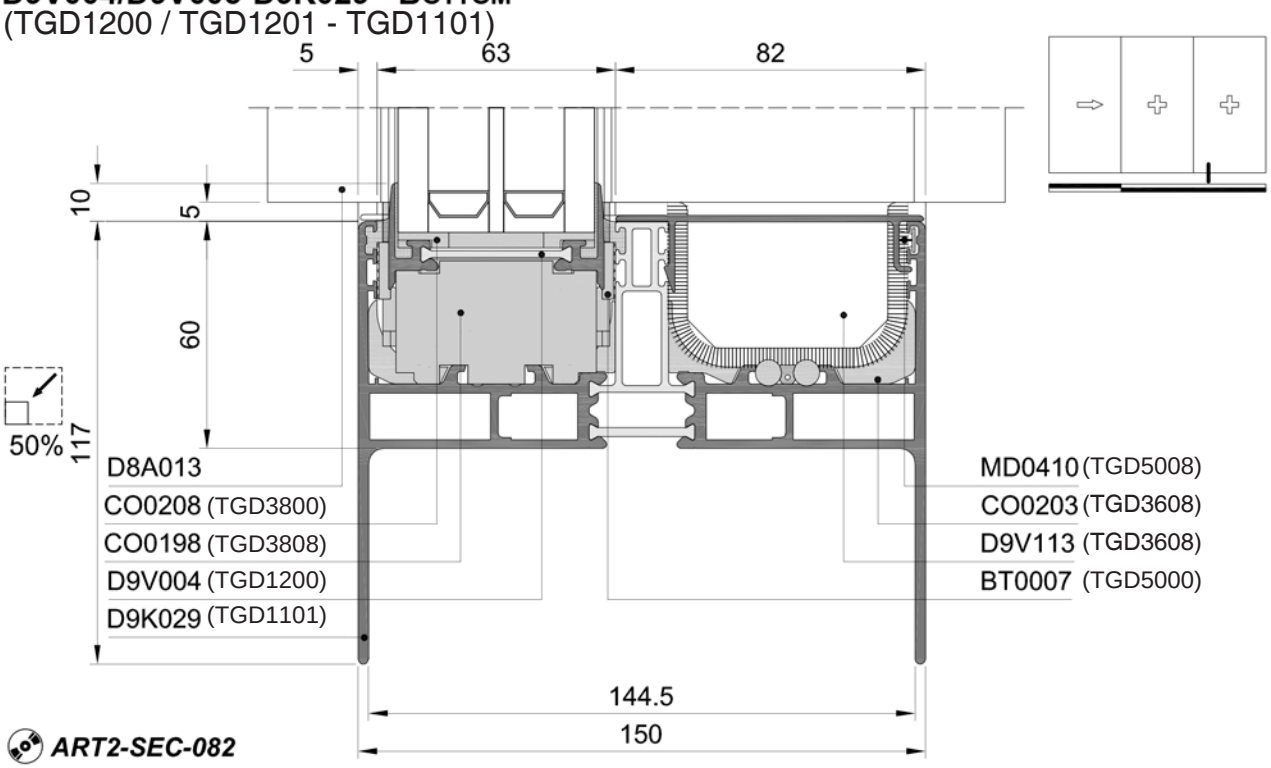

ART2-SEC-082

D9V004/D9V005-D9T001 - MIDDLE
(TGD1200 / TGD1201 -)

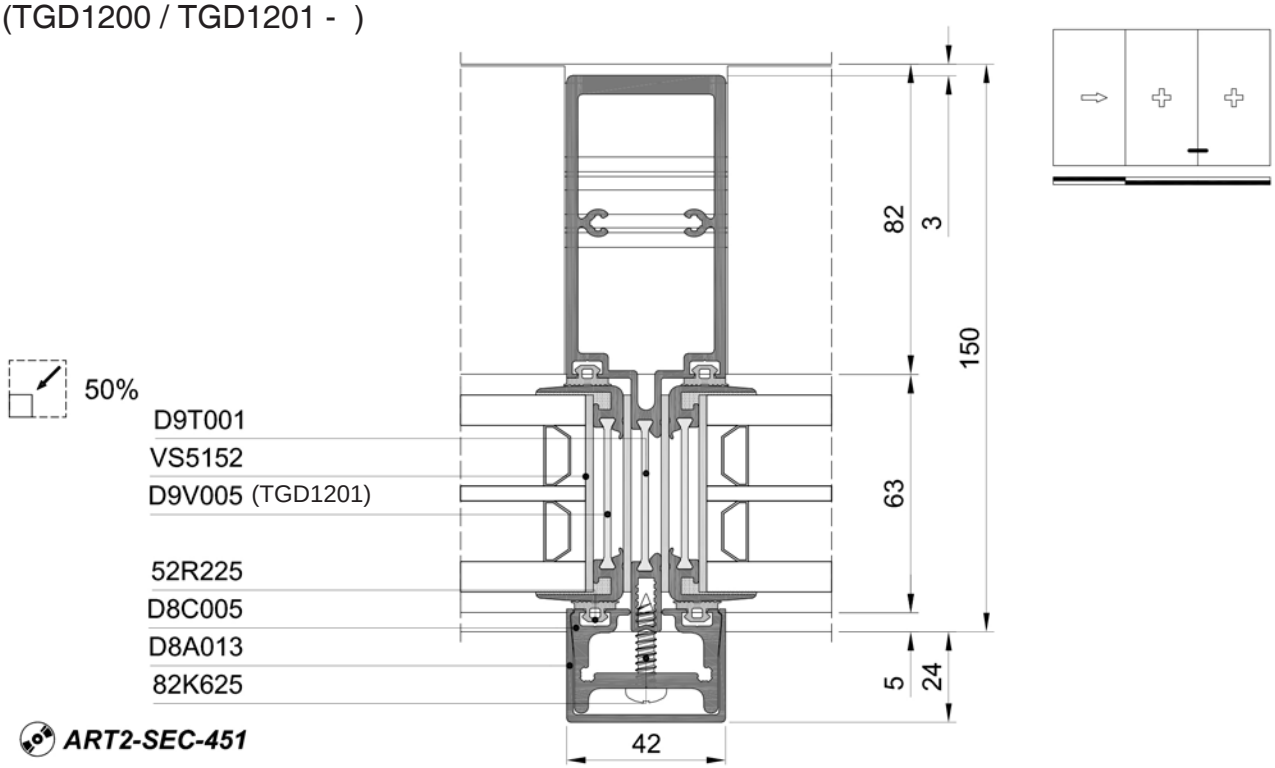

ART2-SEC-451

KU0015/D9V004-D9K025 - TOP
(TGD4005 / TGD1200 - TGD1100)

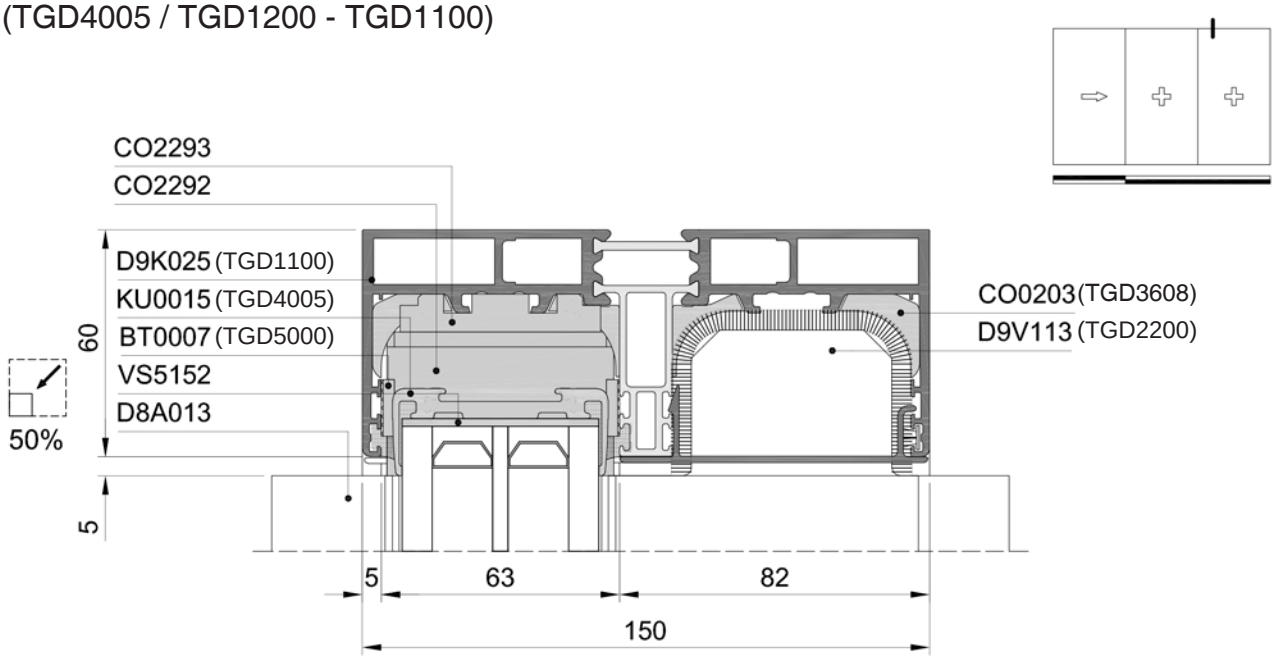

ART2-SEC-083

Sections

Various

KU0015/D9V004-D9T001 - MIDDLE
(TGD4005 / TGD1200 -)

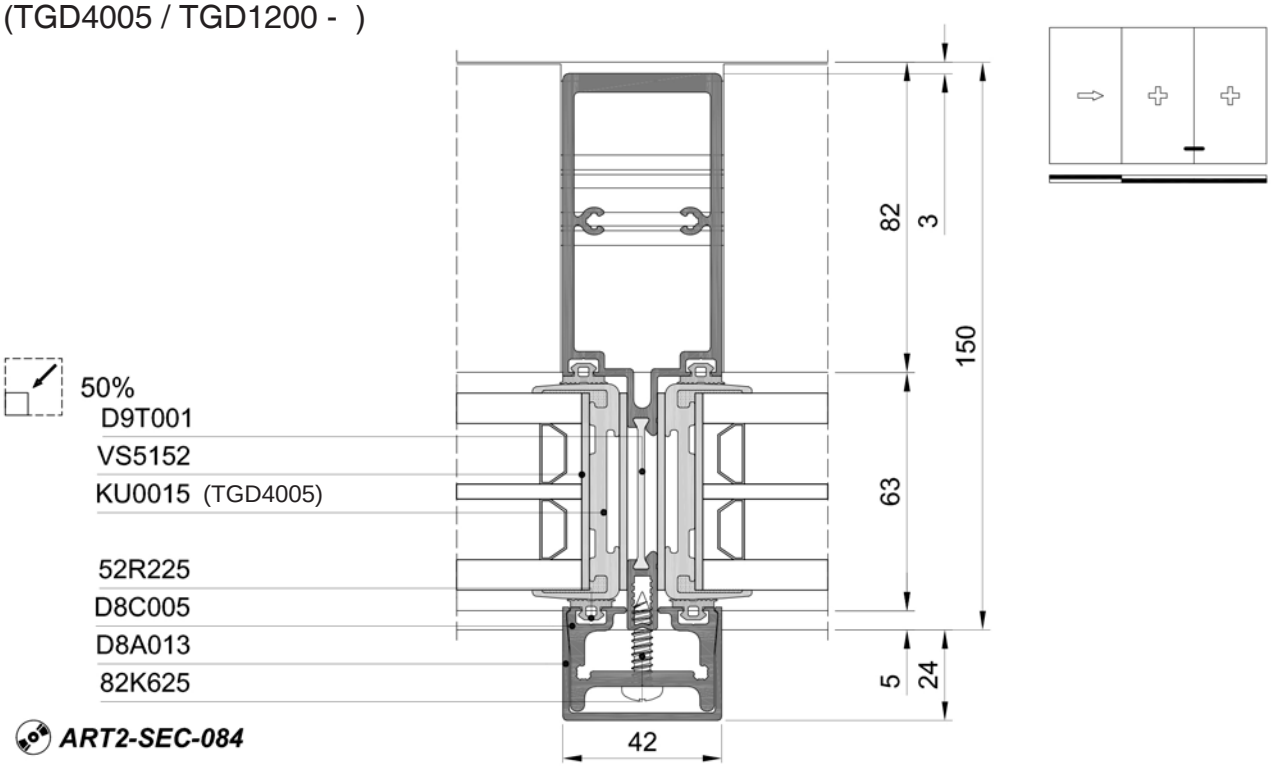

ART2-SEC-084

D9K025 - TOP LEFT
(TGD1100)

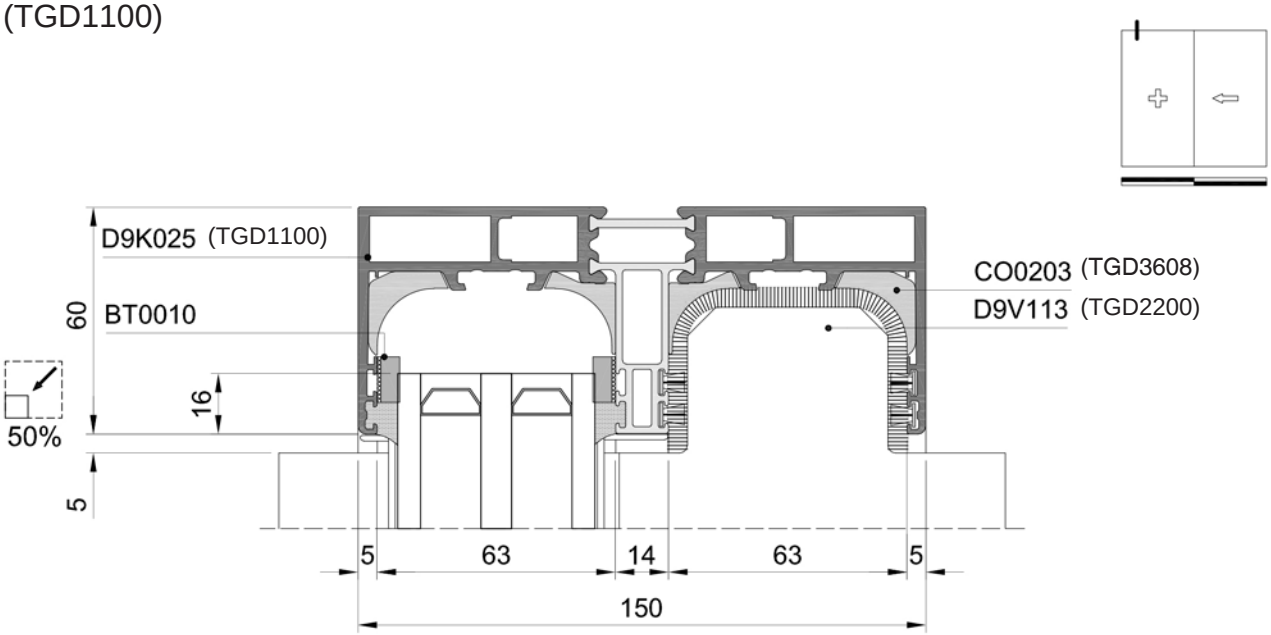

ART2-SEC-009

D9K029 - BOTTOM RIGHT
(TGD1101)

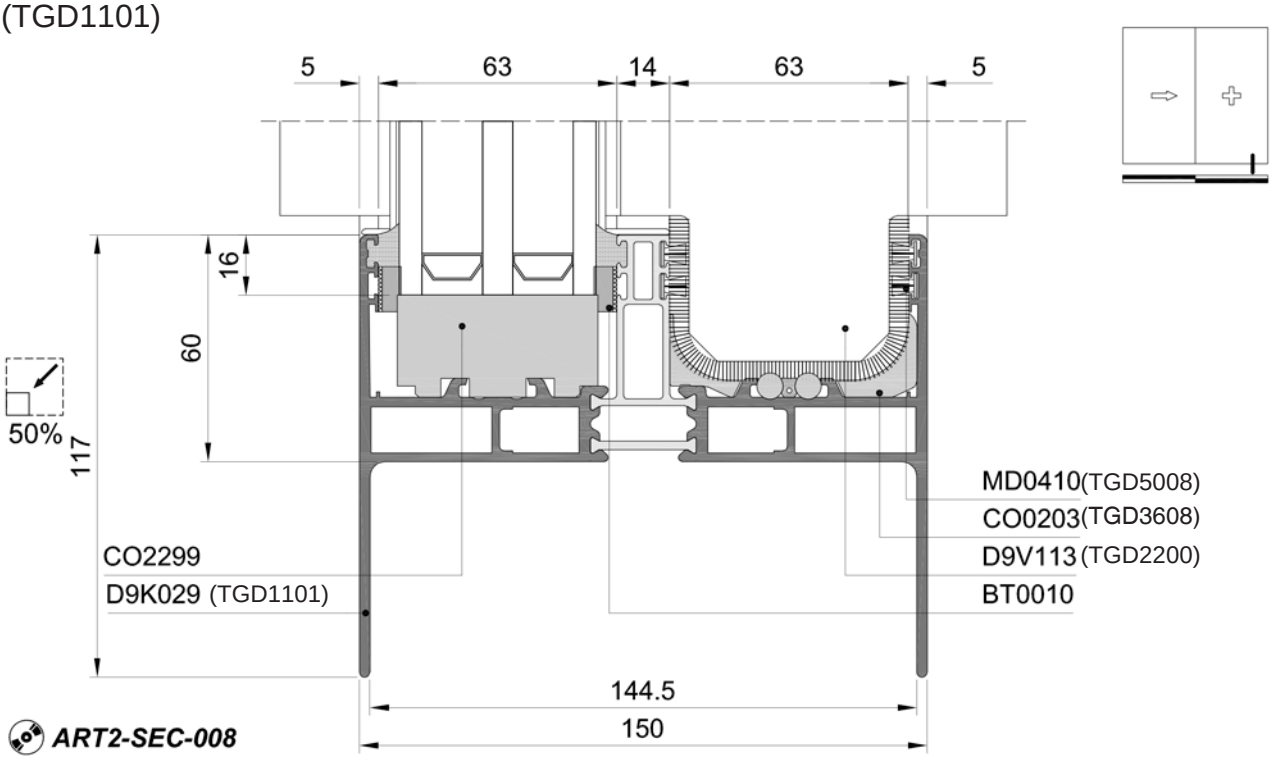

ART2-SEC-008

D9K025 - RIGHT
(TGD1100)

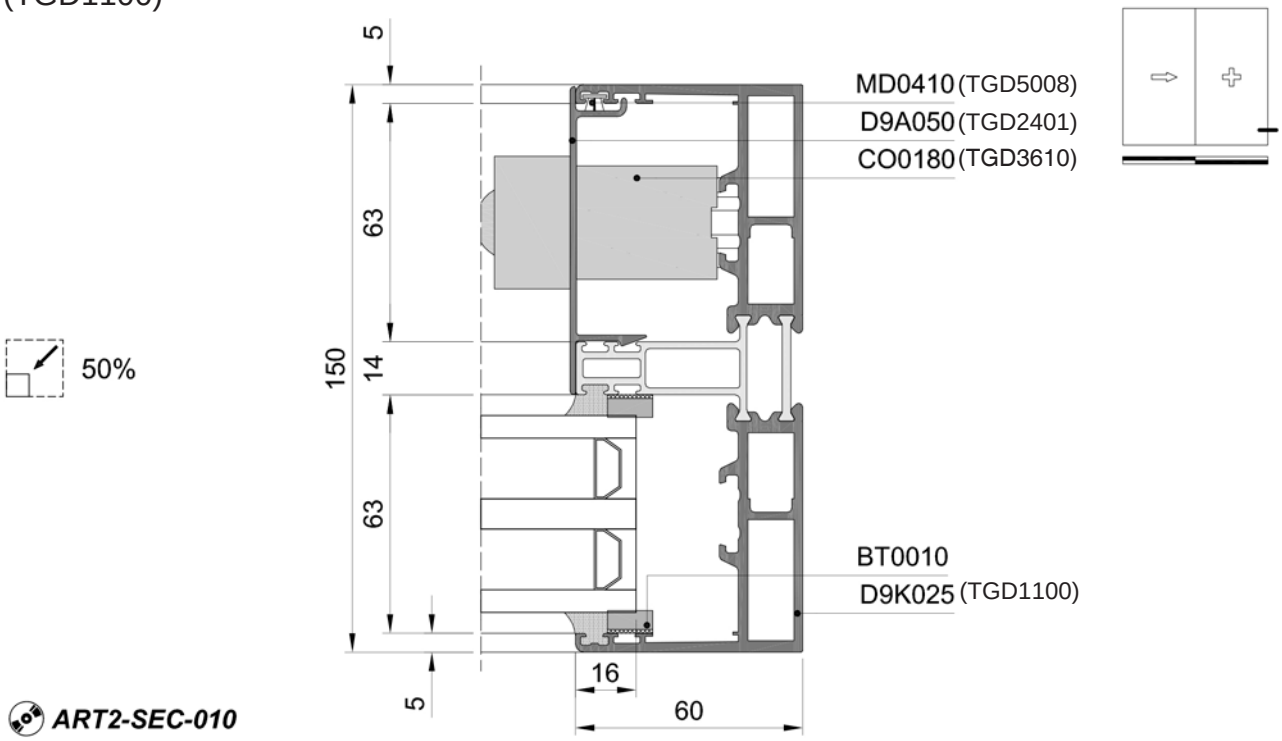

ART2-SEC-010

Sections

Various

TECHNAL®

D9T001 - MIDDLE

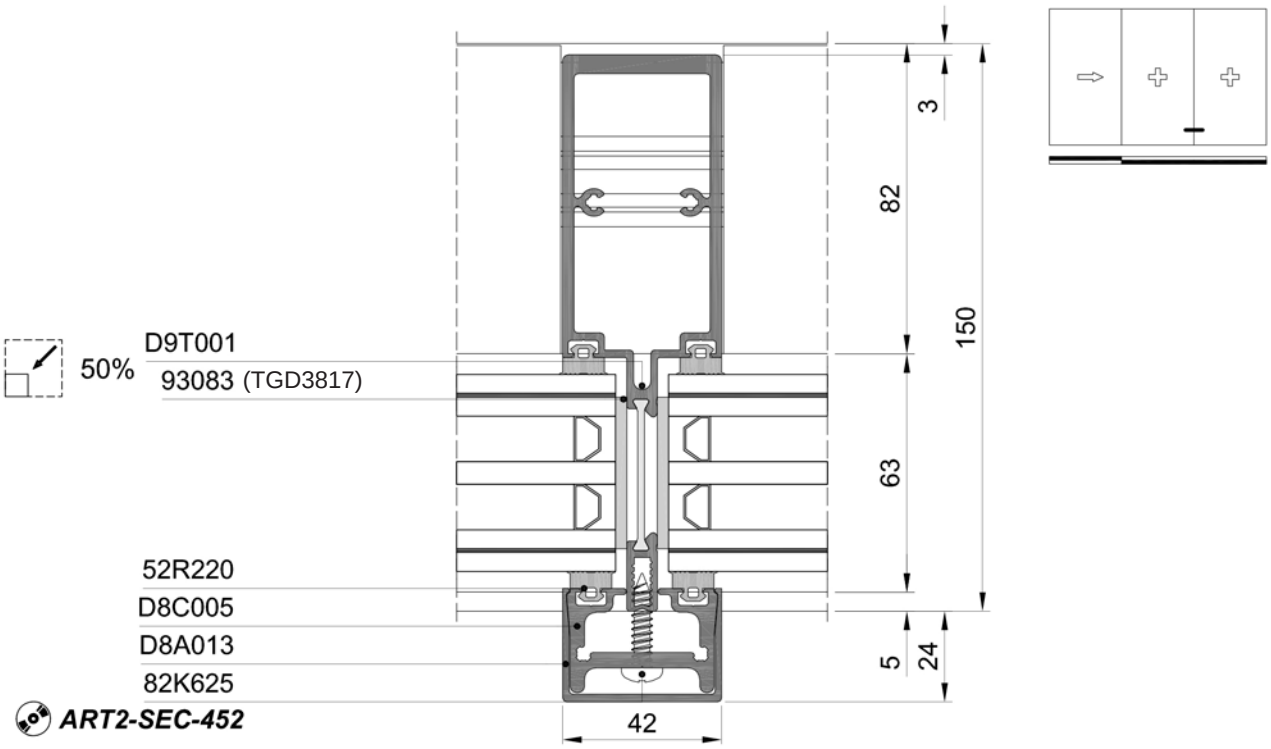

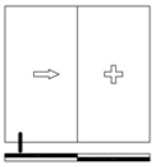

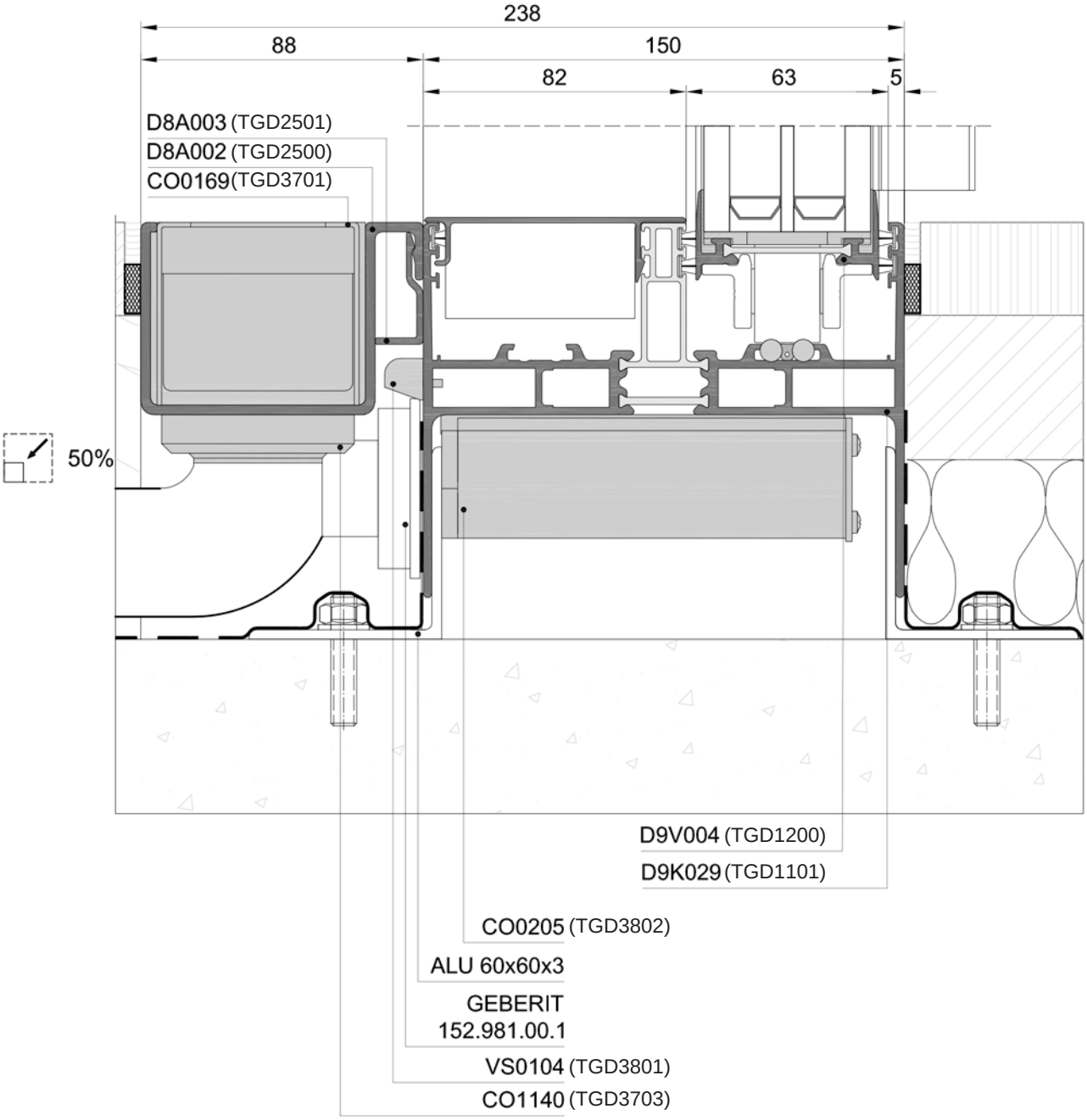
238
88
150
82
63
5
D8A003 (TGD2501)
D8A002 (TGD2500)
CO0169(TGD3701)
50%
D9V004 (TGD1200)
D9K029 (TGD1101)
CO0205 (TGD3802)
ALU 60x60x3
GEBERIT
152.981.00.1
VS0104 (TGD3801)
CO1140 (TGD3703)

ART2-SEC-715

Sections

Building connections

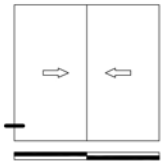

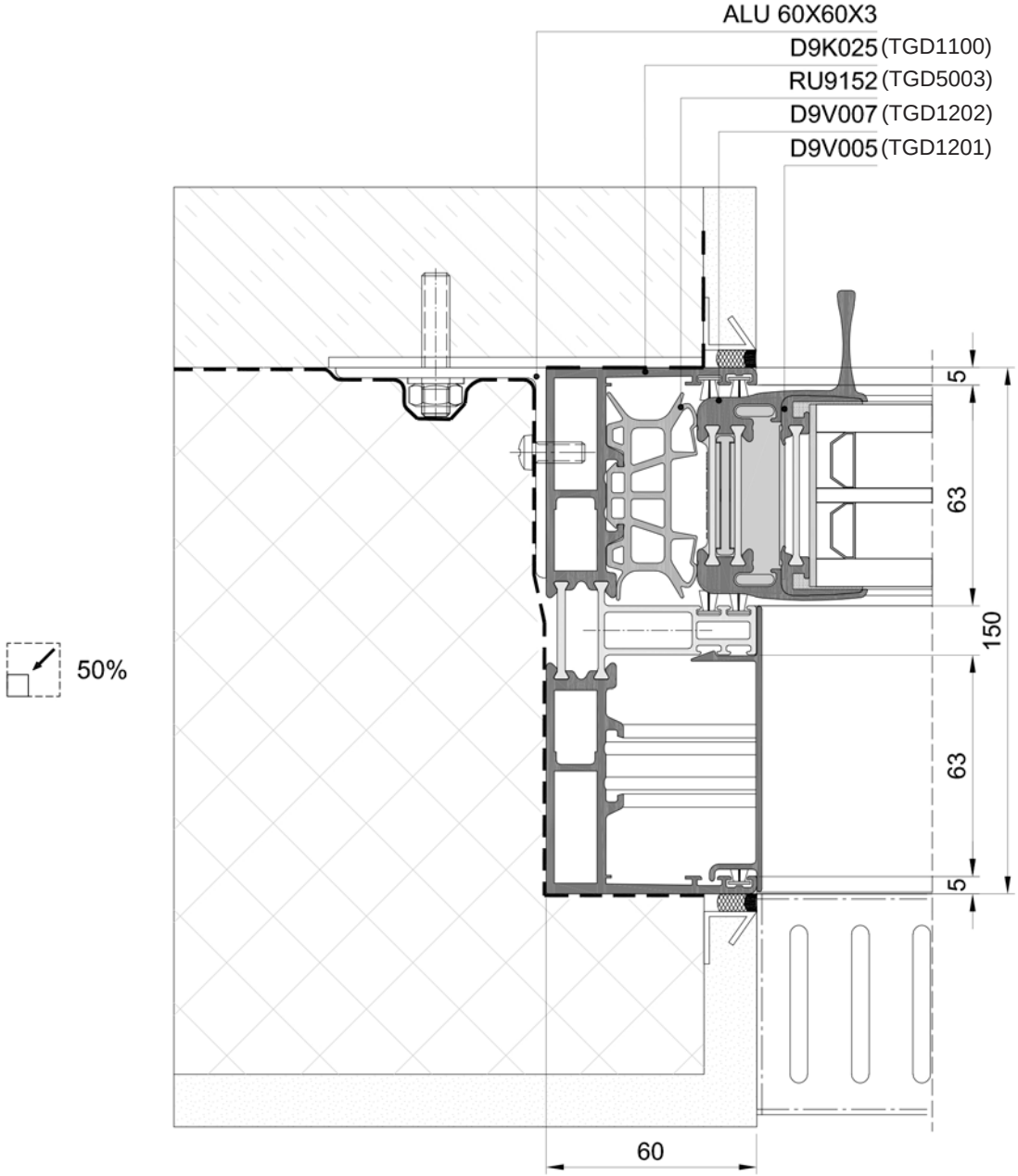

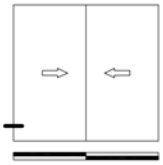

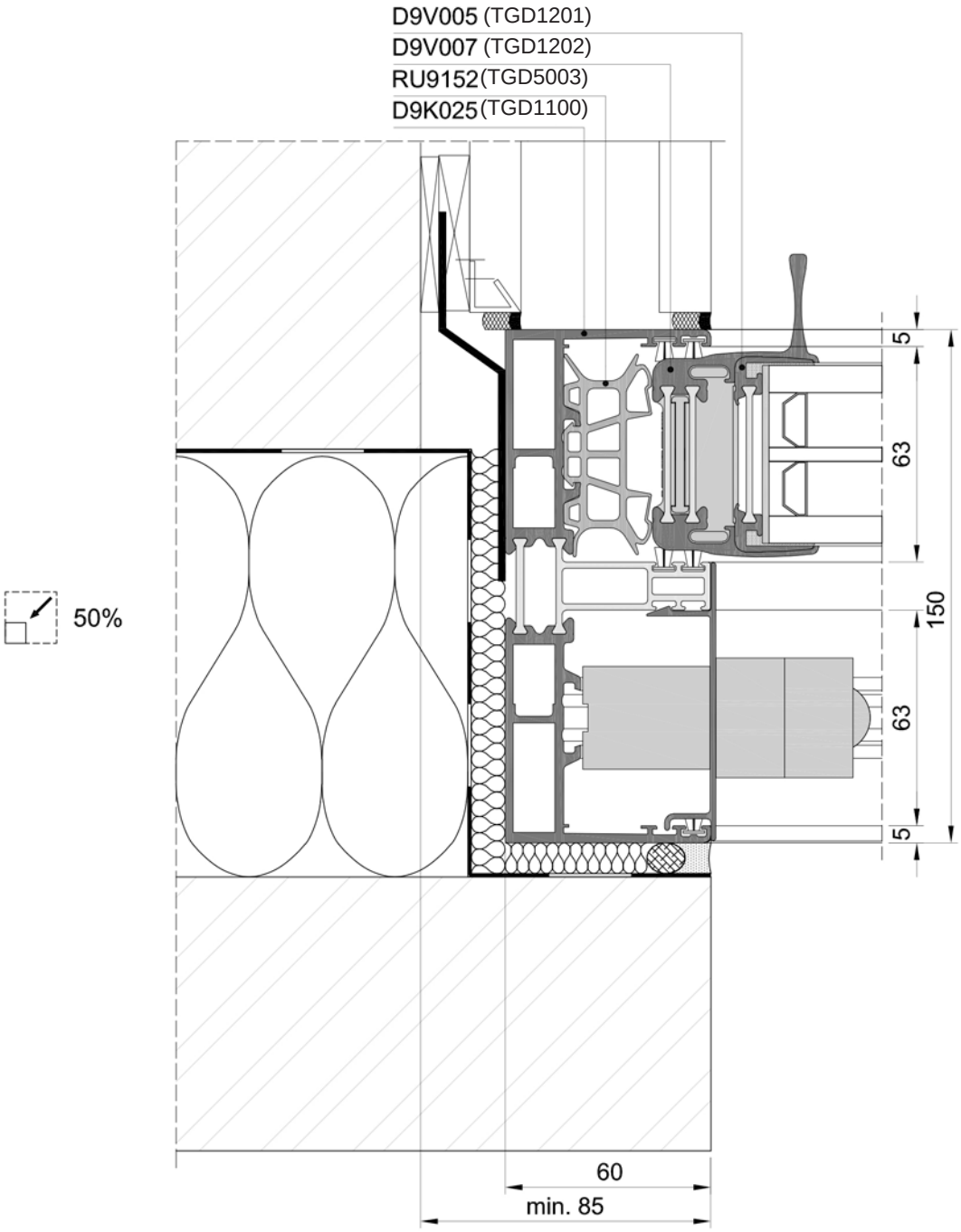
D9V005 (TGD1201)
D9V007 (TGD1202)
RU9152 (TGD5003)
D9K025 (TGD1100)
50%
5
63
150
63
5
60
min. 85

ART2-SEC-718

Sections

Building connections

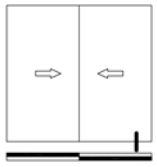

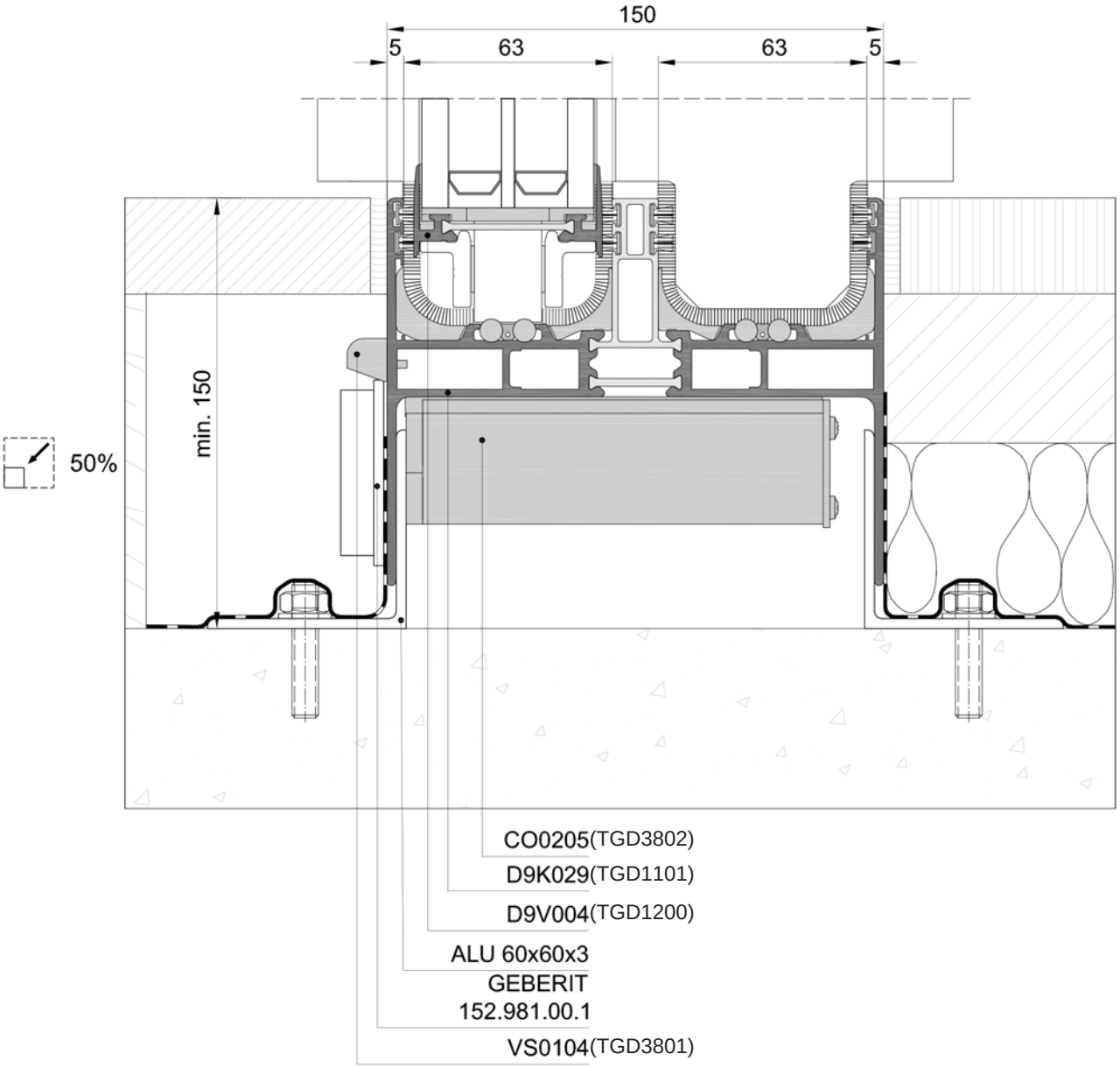

ART2-SEC-717

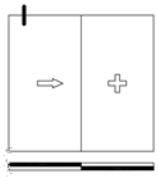

50%

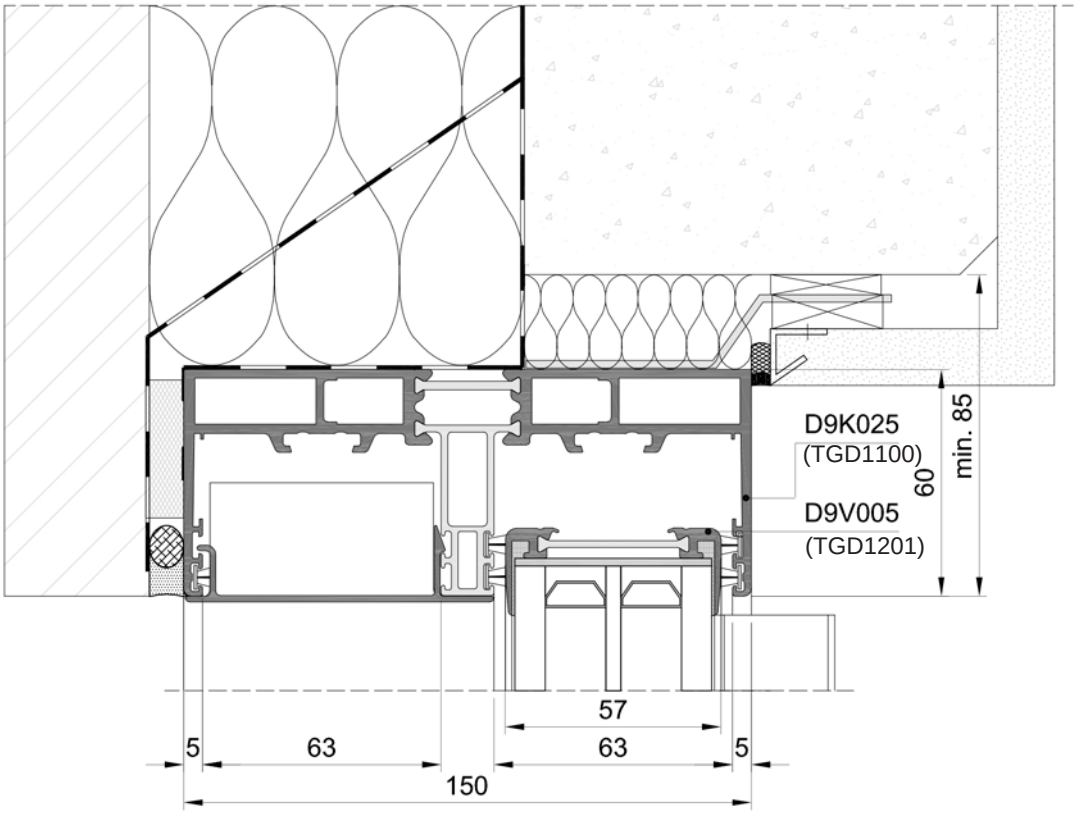

ART2-SEC-719

Sections

Building connections

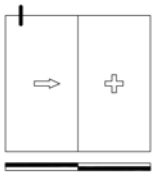

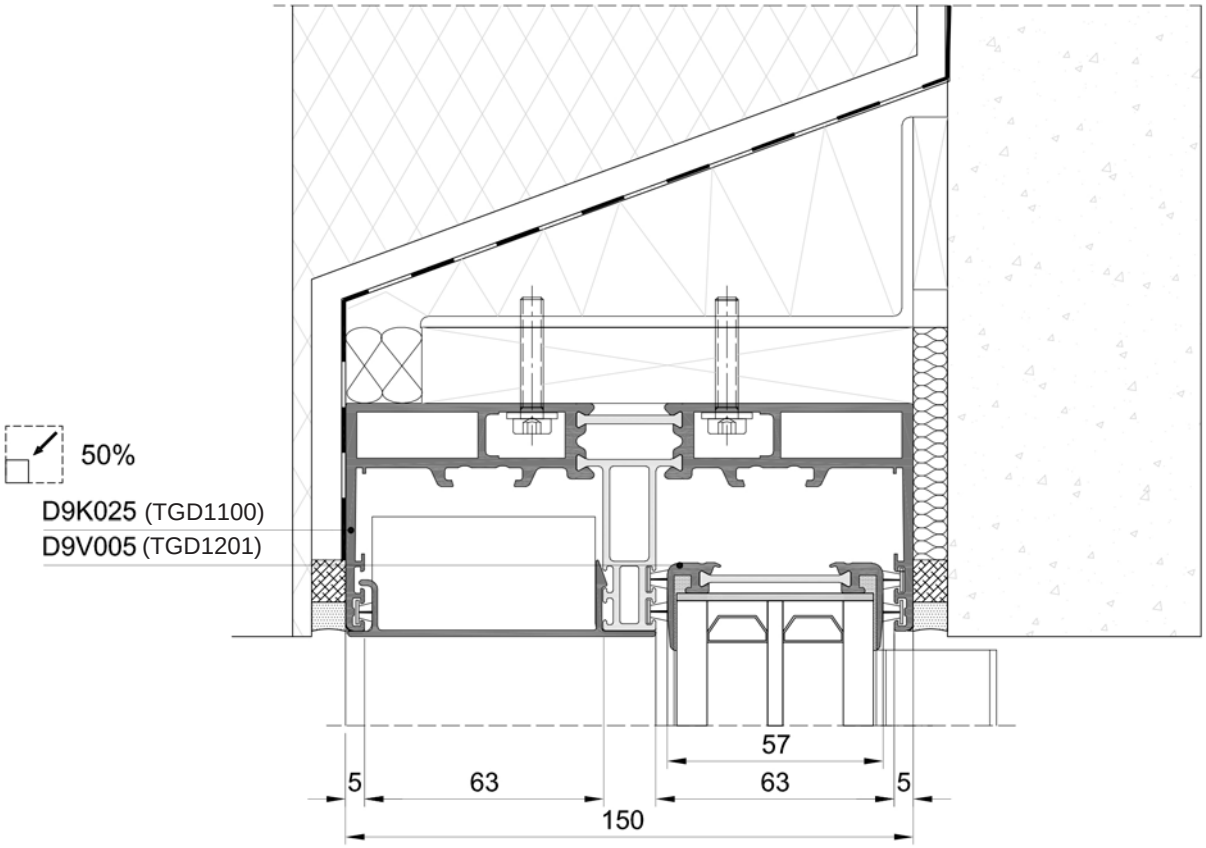

ART2-SEC-720

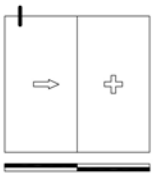

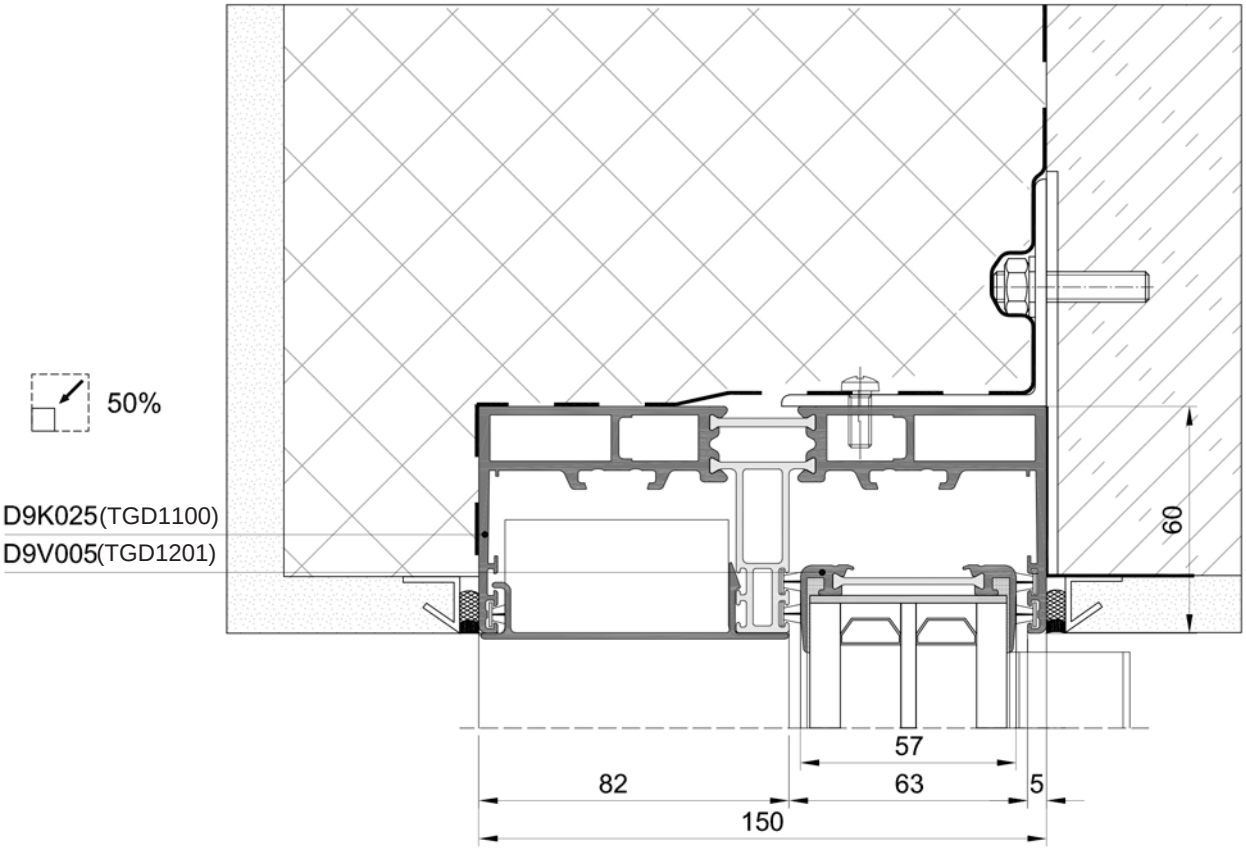

ART2-SEC-721

Sections

Building connections

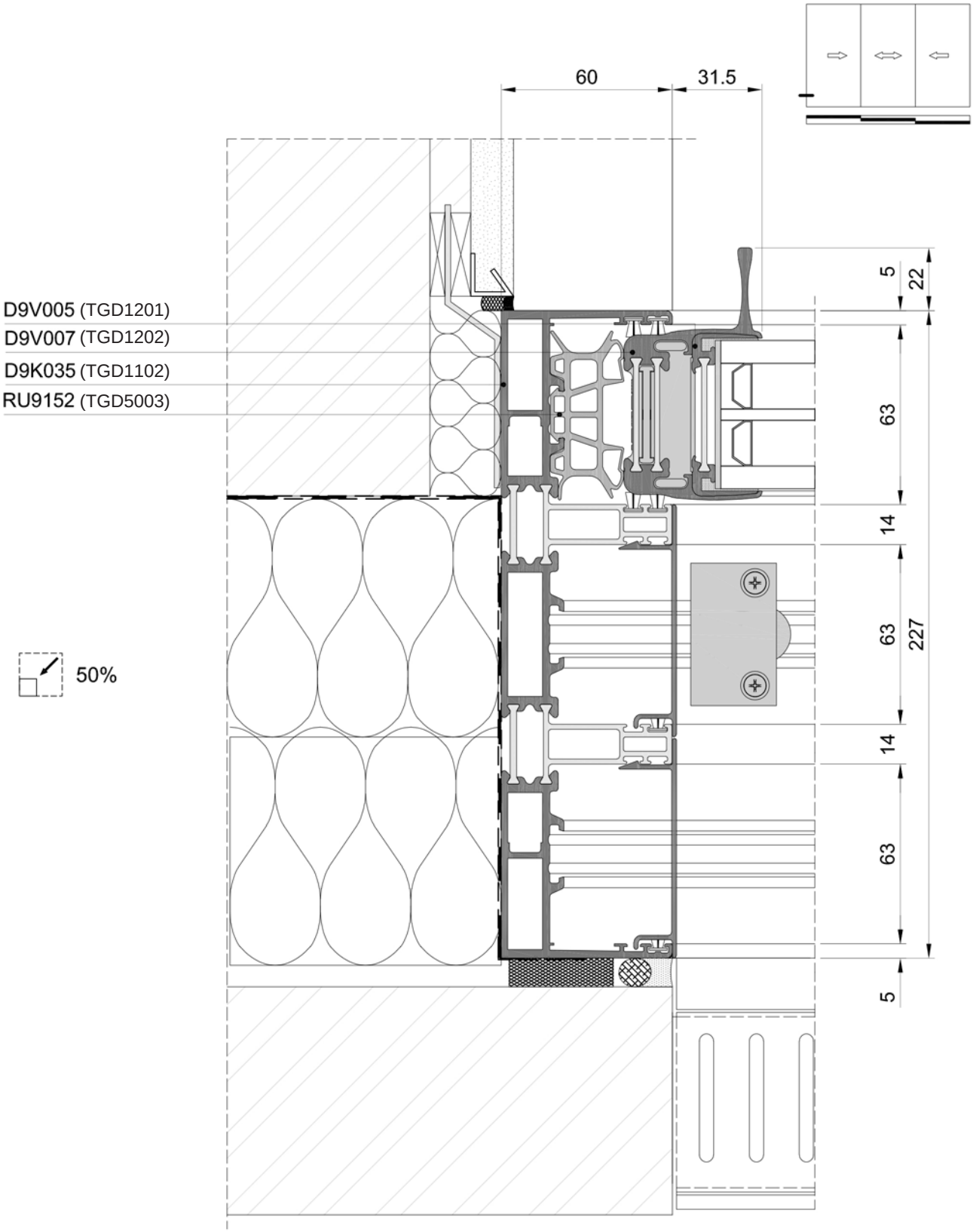

ART2-SEC-722

Cuting measure plans

Cuting measure plans

General directives

1. Sapa Building System encloses the lists with cutting sizes and accessories to enable quick calculation of the materials. However, these lists show a selection of the system 's most common applications. Cutting measures plans of combinations of applications or situations that are not in these lists should be provided by the skilled fabricator himself. If requested , Sapa Building System will assist him, of course.
2. It is possible to calculate the cutting sizes of simple and more complex windows.
3. Outside always means below the horizontal and left of the vertical section.

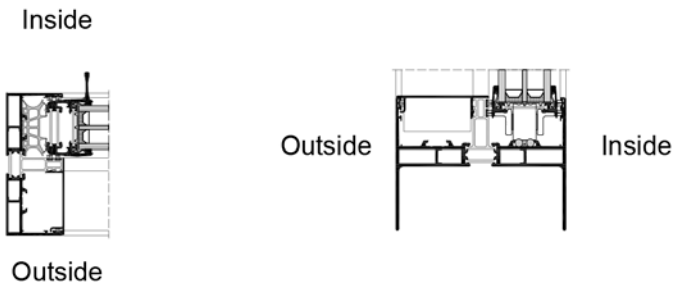

4. The measures L and H correspond with the respective width and height of the frame.

5. The parameters allow you to calculate the whole range of frames , vents and transoms.
6. Please consult chapter "Accessories" for an alternative choice of accessories and chapters "Choice of hardware " and "Hardware & assembly drawings" for hardware.
7. Anchors: per side at least two anchors, max. intermediate distance of 750 mm. They are placed near turning , hinge and closing points and are ca. 200 mm away from angles and 1 or transoms. They are not included in the lists, please consult chapter "Hardware & assembly drawings".
8. Glazing: for information on installing glazing supports and fillings, see chapter "Hardware & assembly drawings" .

46 мм

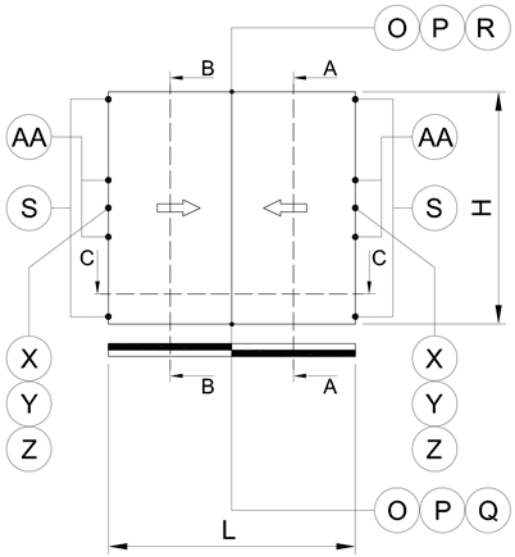
O P R
B
A
AA
AA
S
S
H
C
C
X
Y
Z
X
Y
Z
B
A
O P Q
L

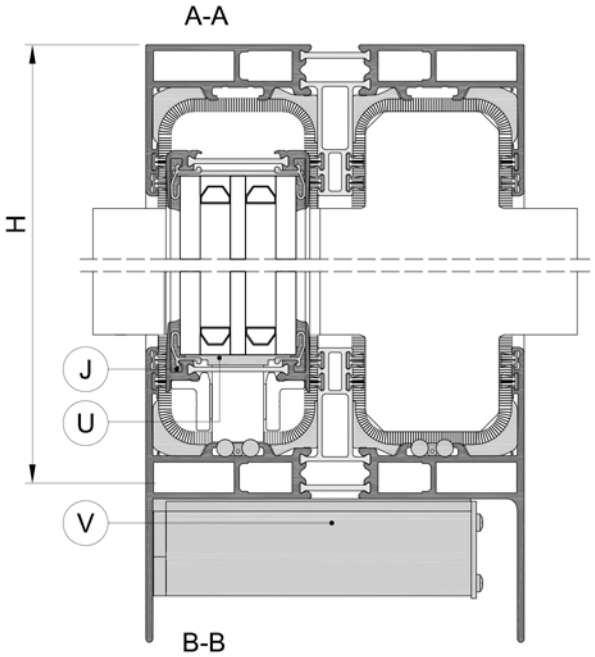
A-A
H
J
U
V

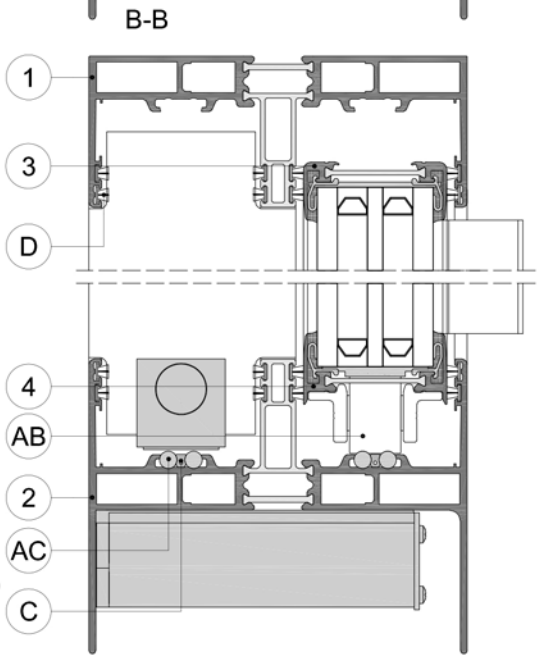
B-B
1
3
D
4
AB
2
AC
C

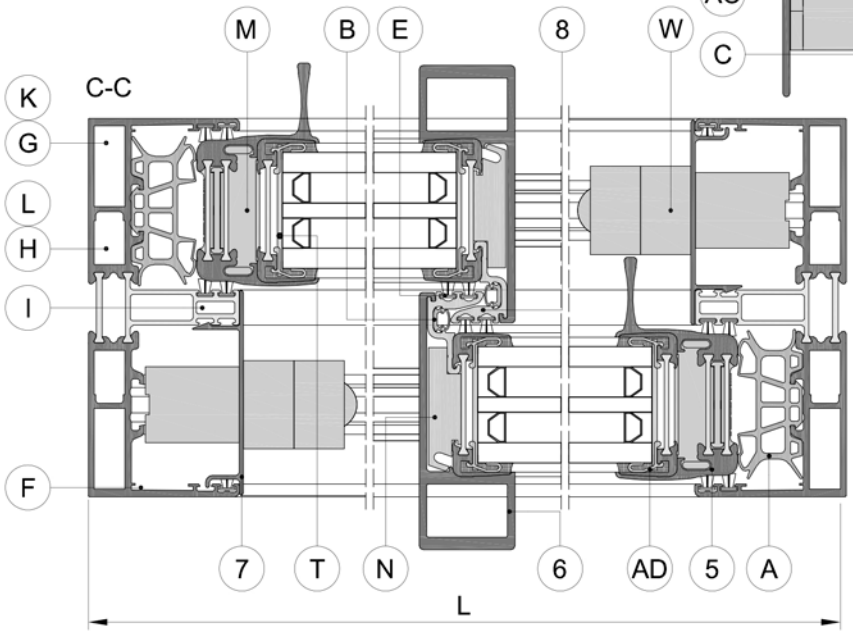
M
B
E
8
W
K
C-C
G
L
H
I
F
7
T
N
6
AD
5
A
L

Cuting measure plans

2 - Rail

	Profiles		Quantity	Shape	Sawing length	
1		D9K025 (TGD1102)	2 1		H L	
2		D9K029 (TGD1103)	1		L + 114	
3		D9V005 (TGD1201)	4 2		H - 89 L/2 - 61.5	
4		D9V004 (TGD1200)	2		L/2 - 61.5	
5		D9V007 (TGD1202)	1		H - 140	
6		D9V113 (TGD2200)	2		H - 53	
7		D9A050 (TGD2401)	2		H - 60	
9	L=7000mm	KU0012 (TGD4004)	2		H - 130	
	Glass dimensions				L/2 - 81.5	H - 109

	Accessories	Quantity
A	RU9152 (TGD5003)	2(H - 47)
B	RU9121 (TGD5002)	2(H - 130)
C	RU9154 (TGD5005)	2(L - 44)
D	MD0410 (TGD5008)	10(H - 86) 16(L - 86)
E	MD0410 (TGD5008)	4(H - 130)
F	HV4M12 (TGD3607)	8
G	HV9M16 (TGD3602)	8
H	HV9M17 (TGD3603)	8
I	CO0153 (TGD3600)	4
J	HV4K05 (TGD3606)	16
K	VS9973 (TGD3812)	8
L	VS9974 (TGD3813)	8
M	CO0199 (TGD3814)	4
N	CO0207 (TGD3804)	J.3.x
O	CO0203 (TGD3608)	4

	Accessories	Quantity
P	CO0204 (TGD3805)	4
Q	VS1420 (TGD3809)	1
R	CO1131 (TGD3810)	1
S	CO0210 (TGD3806)	4
T	93082 (TGD3816)	J.2.x
U	CO0208 (TGD3800)	4
V	CO0205 (TGD3803)	J.6.x
W	CO0180 + CO0159 (TGD3610 + TGD3611)	2
X	CO0214 (TGD6001)	2
Y	SF3054 (TGD6002)	2
Z	ZB0052 (TGD6004)	2
AA	SV2088 (TGD6012)	4
AB	SV0037 (TGD6014)	4
AC	CO1199 (TGD4003)	4(L - 44)
AD	CO0237 (TGD4006)	J.2.x

52 мм

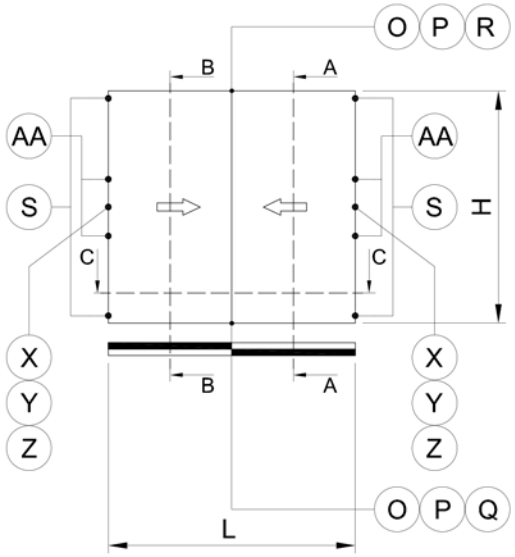
O P R
B
A
AA
AA
S
S
H
C
C
X
Y
Z
X
Y
Z
B
A
O P Q
L

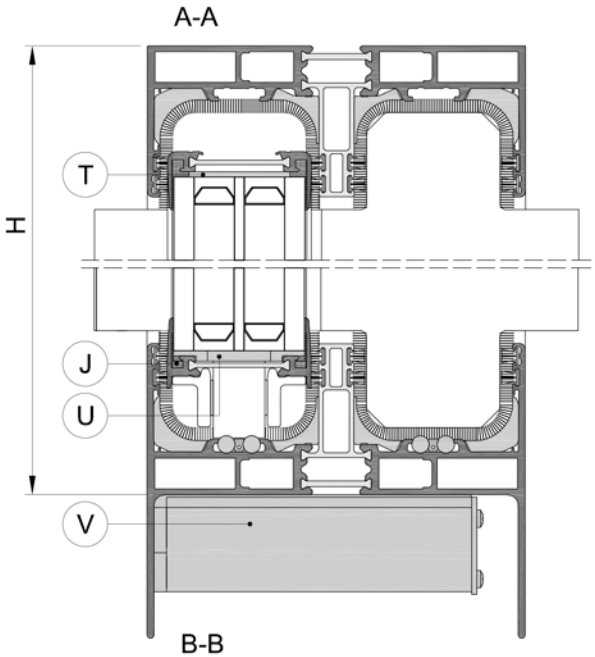
A-A
T
H
J
U
V

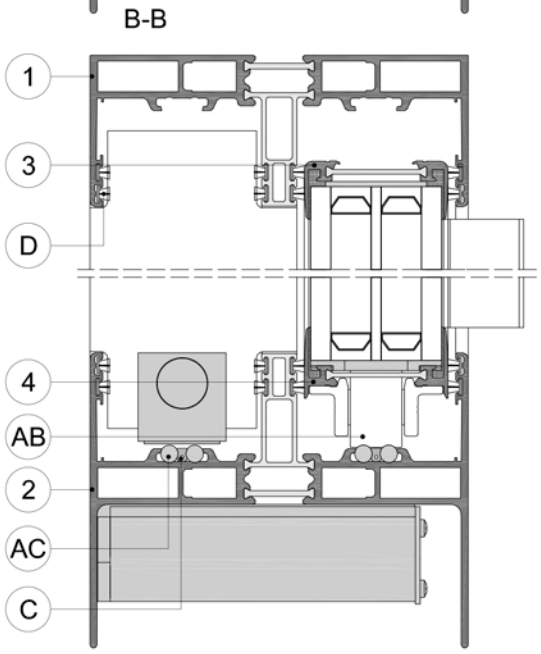
B-B
1
3
D
4
AB
2
AC
C

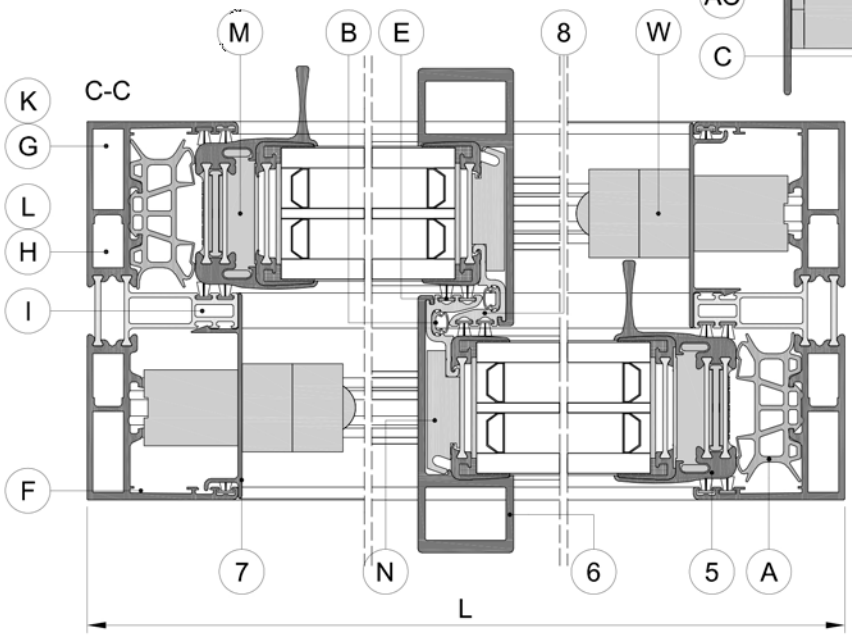
M
B
E
8
W
K
C-C
G
L
H
I
F
7
N
6
5
A
L

Cuting measure plans

2 - Rail

	Profiles		Quantity	Shape	Sawing length	
1		D9K025 (TGD1100)	2 1		H L	
2		D9K029 (TGD1101)	1		L + 114	
3		D9V005 (TGD1201)	4 2		H - 89 L/2 - 61.5	
4		D9V004 (TGD1200)	2		L/2 - 61.5	
5		D9V007 (TGD1202)	1		H - 140	
6		D9V113 (TGD2200)	2		H - 53	
7		D9A050 (TGD2401)	2		H - 60	
8	L=7000mm	KU0012 (TGD4004)	2		H - 130	
	Glass dimensions				L/2 - 81.5	H - 109

	Accessories	Quantity
A	RU9152 (TGD5003)	2(H - 47)
B	RU9121 (TGD5002)	2(H - 130)
C	RU9154 (TGD5005)	2(L - 44)
D	MD0410 (TGD5008)	10(H - 86) 16(L - 86)
E	MD0410 (TGD5008)	4(H - 130)
F	HV4M12 (TGD3607)	8
G	HV9M16 (TGD3602)	8
H	HV9M17 (TGD3603)	8
I	CO0153 (TGD3600)	4
J	HV4K05 (TGD3606)	16
K	VS9973 (TGD3812)	8
L	VS9974 (TGD3813)	8
M	CO0199 (TGD3814)	4
N	CO0207 (TGD3804)	J.3.x

	Accessories	Quantity
O	CO0203 (TGD3608)	4
P	CO0204 (TGD3805)	4
Q	VS1420 (TGD3809)	1
R	CO1131 (TGD3810)	1
S	CO0210 (TGD3806)	4
T	93082 (TGD3816)	J.2.x
U	CO0208 (TGD3800)	4
V	CO0205 (TGD3802)	J.6.x
W	CO0180 + CO0159 (TGD3610 + TGD3611)	2
X	CO0214 (TGD6001)	2
Y	SF3054 (TGD6002)	2
Z	ZB0052 (TGD6004)	2
AA	SV2088 (TGD6012)	4
AB	SV0037 (TGD6014)	4
AC	CO1199 (TGD4003)	4(L - 44)

46 мм

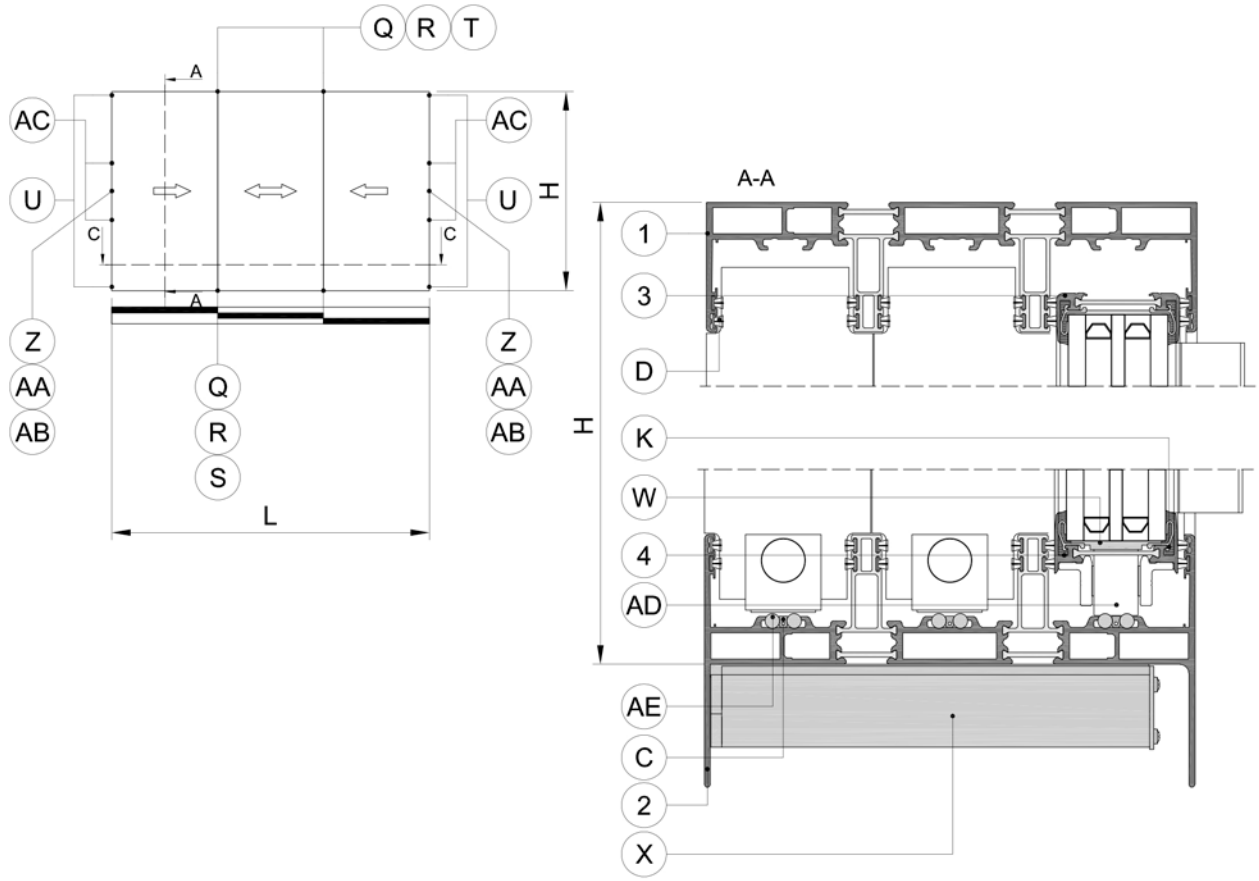
Q
R
T
A
AC
AC
U
U
H
C
C
A
Z
AA
AB
Z
AA
AB
Q
R
S
L
A-A
1
3
D
H
K
W
4
AD
AE
C
2
X

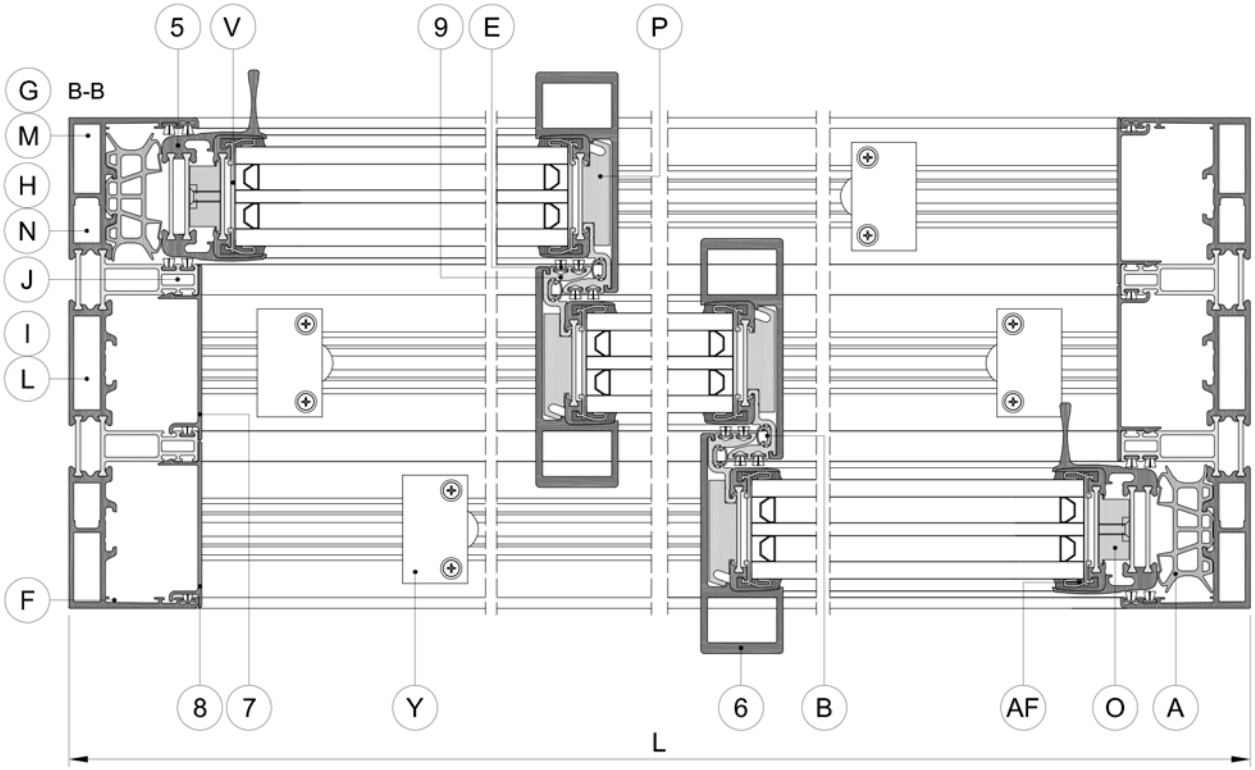
5
V
9
E
P
G
B-B
M
H
N
J
I
L
F
8
7
Y
6
B
AF
O
A
L

Cuting measure plans

3 - Rail

	Profiles		Quantity	Shape	Sawing length	
1		D9K035 (TGD1102)	2 1		H L	
2		D9K039 (TGD1103)	1		L + 114	
3		D9V005 (TGD1201)	6 3		H - 89 L/3 - 37	
4		D9V004 (TGD1200)	3		L/3 - 37	
5		D9V007 (TGD1202)	2		H - 140	
6		D9V113 (TGD2200)	4		H - 53	
7		D9A050 (TGD2401)	2		H - 60	
8		D9A051 (TGD2402)	2		H - 60	
9		KU0012 (TGD4004)	4		H - 130	
	Glass dimensions				L/3 - 57	H - 109

	Accessories	Quantity
A	RU9152 (TGD5003)	2(H - 47)
B	RU9121 (TGD5002)	4(H - 130)
C	RU9154 (TGD5005)	3(L - 44)
D	MD0410 (TGD5008)	12(H - 86) 24(L - 86)
E	MD0410 (TGD5008)	8(H - 130)
F	HV4M12 (TGD3607)	8
G	HV9M16 (TGD3602)	8
H	HV9M17 (TGD3603)	8
I	HV9M15 (TGD3601)	4
J	CO0153 (TGD3600)	8
K	HV4K05 (TGD3606)	24
L	VS9972 (TGD3811)	4
M	VS9973 (TGD3812)	8
N	VS9974 (TGD3813)	8
O	CO0199 (TGD3814)	4
P	CO0207 (TGD3804)	J.3.x

	Accessories	Quantity
Q	CO0203 (TGD3608)	4
R	CO0204 (TGD3805)	4
S	VS1420 (TGD3809)	2
T	CO1131 (TGD3810)	2
U	CO0210 (TGD3806)	4
V	93082 (TGD3816)	J.2.x
W	CO0208 (TGD3800)	6
X	CO0206 (TGD3803)	J.6.x
Y	CO0201 (TGD3612)	4
Z	CO0214 (TGD6001)	2
AA	SF3054 (TGD6002)	2
AB	ZB0052 (TGD6004)	2
AC	SV2088 (TGD6012)	4
AD	SV0037 (TGD6014)	6
AE	CO1199 (TGD4003)	6(L - 44)
AF	CO0237 (TGD4006)	J.2.x

52 мм

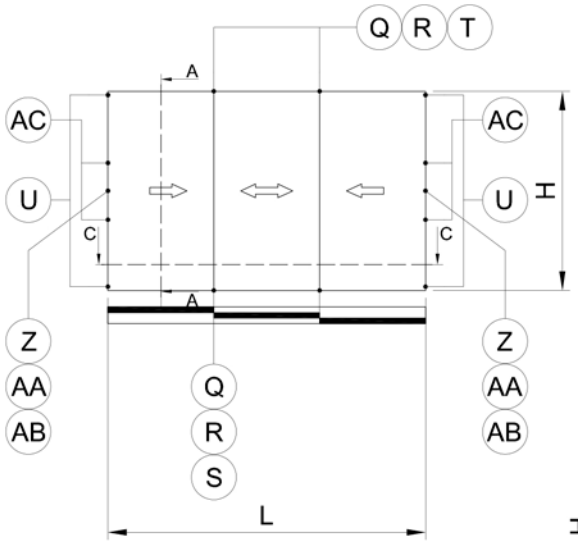
Q
R
T
A
AC
AC
U
U
H
C
C
A
Z
AA
AB
Z
AA
AB
Q
R
S
L

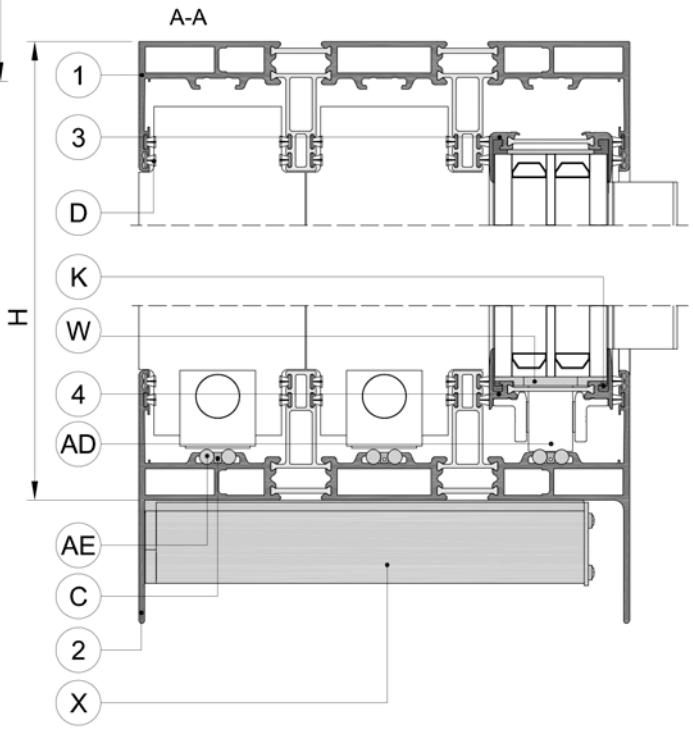
A-A
1
3
D
K
W
4
AD
AE
C
2
X
H

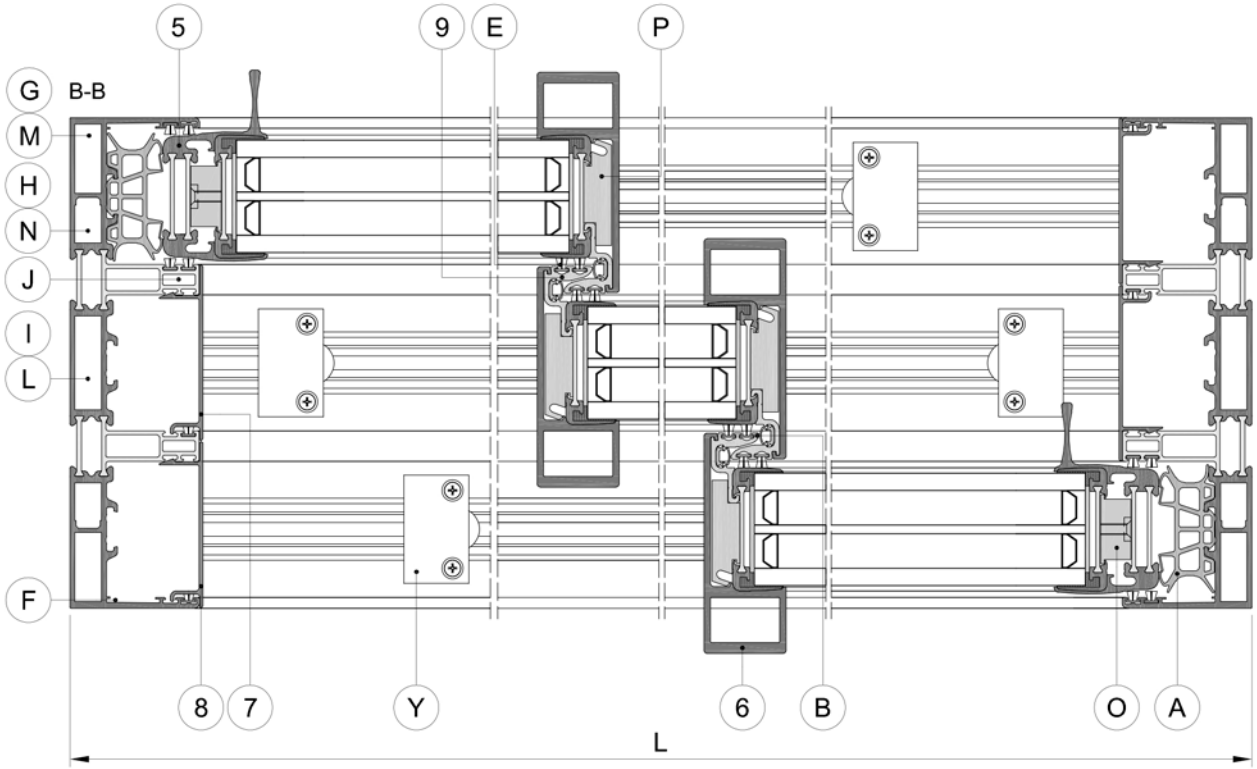
5
9
E
P
G
B-B
M
H
N
J
I
L
F
8
7
Y
6
B
O
A
L

Cuting measure plans

3 - Rail

	Profiles		Quantity	Shape	Sawing length	
1		D9K035 (TGD1102)	2 1		H L	
2		D9K039 (TGD1103)	1		L + 114	
3		D9V005 (TGD1201)	6 3		H - 89 L/3 - 37	
4		D9V004 (TGD1200)	3		L/3 - 37	
5		D9V007 (TGD1202)	2		H - 140	
6		D9V113 (TGD2200)	4		H - 53	
7		D9A050 (TGD2401)	2		H - 60	
8		D9A051 (TGD2402)	2		H - 60	
9	L=7000mm	KU0012 (TGD4004)	4		H - 130	
	Glass dimensions				L/3 - 57	H - 109

	Accessories	Quantity
A	RU9152 (TGD5003)	2(H - 47)
B	RU9121 (TGD5002)	4(H - 130)
C	RU9154 (TGD5005)	3(L - 44)
D	MD0410 (TGD5008)	12(H - 86) 24(L - 86)
E	MD0410 (TGD5008)	8(H - 130)
F	HV4M12 (TGD3607)	8
G	HV9M16 (TGD3602)	8
H	HV9M17 (TGD3603)	8
I	HV9M15 (TGD3601)	4
J	CO0153 (TGD3600)	8
K	HV4K05 (TGD3606)	24
L	VS9972 (TGD3811)	4
M	VS9973 (TGD3812)	8
N	VS9974 (TGD3813)	8
O	CO0199 (TGD3814)	4

	Accessories	Quantity
P	CO0207 (TGD3804)	J.3.x
Q	CO0203 (TGD3608)	4
R	CO0204 (TGD3805)	4
S	VS1420 (TGD3809)	2
T	CO1131 (TGD3810)	2
U	CO0210 (TGD3806)	4
V	93082 (TGD3816)	J.2.x
W	CO0208 (TGD3800)	6
X	CO0206 (TGD3803)	J.6.x
Y	CO0201 (TGD3612)	4
Z	CO0214 (TGD6001)	2
AA	SF3054 (TGD6002)	2
AB	ZB0052 (TGD6004)	2
AC	SV2088 (TGD6012)	4
AD	SV0037 (TGD6014)	6
AE	CO1199 (TGD4003)	6(L - 44)

46 MM

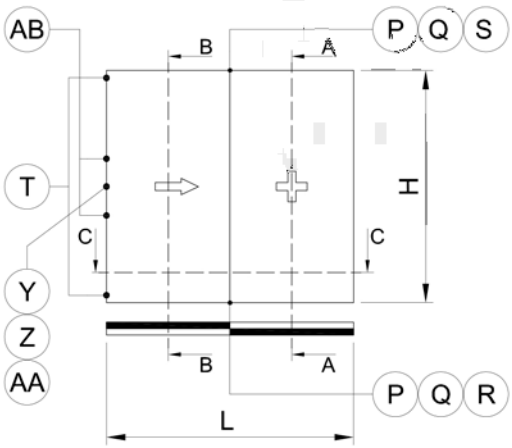
AB
B
A
P
Q
S
T
H
C
C
Y
Z
AA
B
A
P
Q
R
L

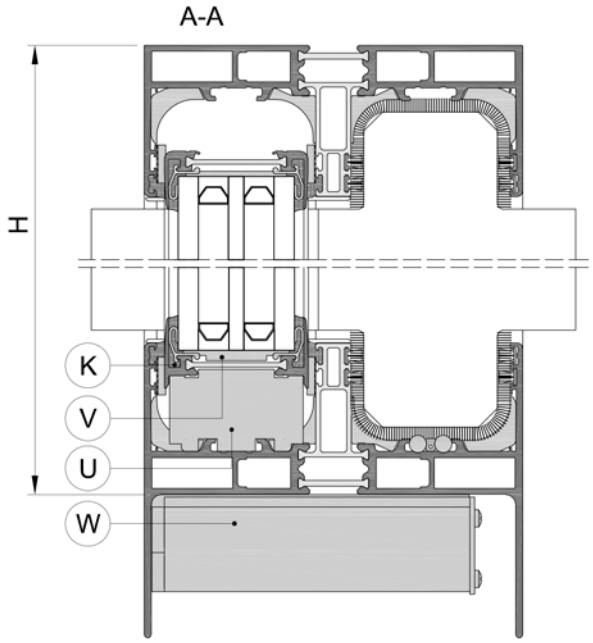
A-A
H
K
V
U
W

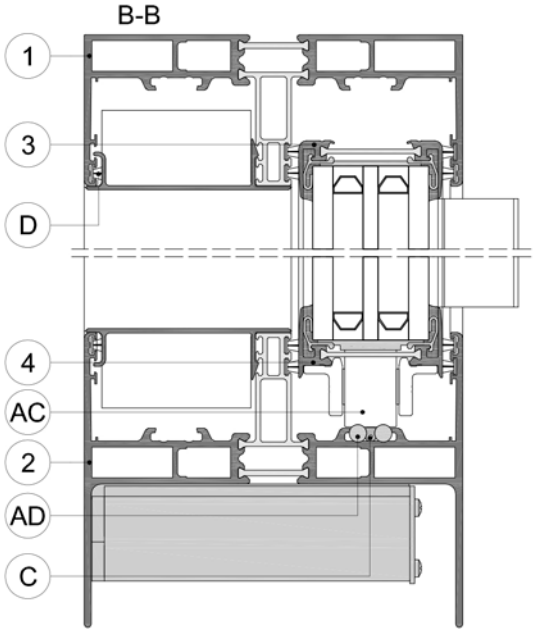
B-B
1
3
D
4
AC
2
AD
C

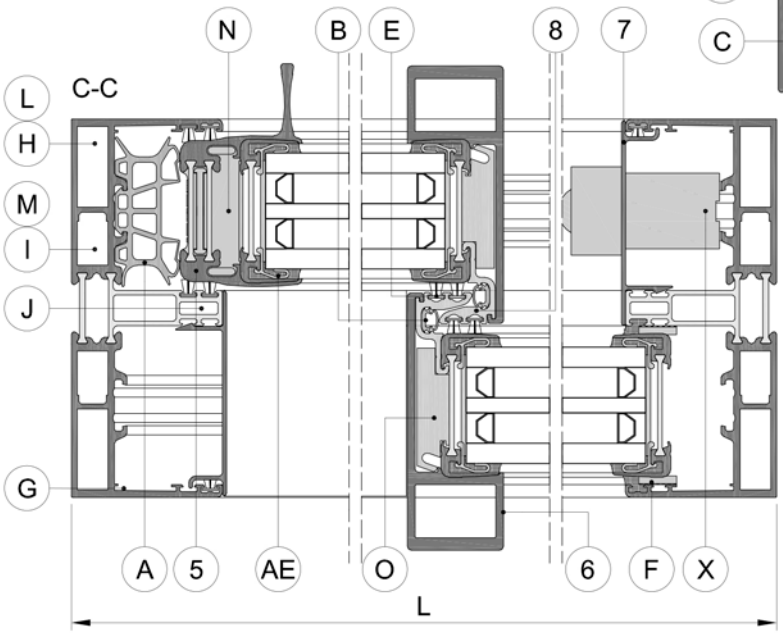
N
B
E
8
7
L
C-C
H
M
I
J
G
A
5
AE
O
6
F
X
L

Cuting measure plans

2 - Rail - Slide - Fix

	Profiles		Quantity	Shape	Sawing length	
1		D9K025 (TGD1100)	2 1		H L	
2		D9K029 (TGD1101)	1		L + 114	
3		D9V005 (TGD1201)	4 2		H - 89 L/2 - 48.5	
4		D9V004 (TGD1200)	2		L/2 - 48.5	
5		D9V007 (TGD1202)	1		H - 140	
6		D9V113 (TGD2200)	2		H - 53	
7		D9A050 (TGD2401)	2 1		H - 60 L/2 - 67.5	
8		KU0012 (TGD4004)	2		H - 130	
	Glass dimensions				L/2 - 68.5	H - 109

	Accessories	Quantity
A	RU9152 (TGD5003)	H - 47
B	RU9121 (TGD5002)	2(H - 130)
C	RU9154 (TGD5005)	L - 44
D	MD0410 (TGD5008)	6(H - 86) 10(L - 86)
E	MD0410 (TGD5008)	4(H - 130)
F	BT0007 (TGD5000)	2(H - 80) 4(L/2 - 40)
G	HV4M12 (TGD3607)	8
H	HV9M16 (TGD3602)	8
I	HV9M17 (TGD3603)	8
J	CO0153 (TGD3600)	4
K	HV4K05 (TGD3606)	16
L	VS9973 (TGD3812)	8
M	VS9974 (TGD3813)	8
N	CO0199 (TGD3814)	2
O	CO0207 (TGD3804)	J.3.x
P	CO0203 (TGD3608)	4

	Accessories	Quantity
Q	CO0204 (TGD3805)	4
R	VS1420 (TGD3809)	1
S	CO1131 (TGD3810)	1
T	CO0210 (TGD3806)	2
U	CO0198 (TGD3808)	J.9.x
V	93082 (TGD3816)	J.2.x
W	CO0208 (TGD3800)	4
X	CO0205 (TGD3802)	J.6.x
Y	CO0180 (TGD3610)	1
Z	CO0214 (TGD6001)	1
AA	SF3054 (TGD6002)	1
AB	ZB0052 (TGD6004)	1
AC	SV2088 (TGD6012)	2
AD	SV0037 (TGD6014)	2
AE	CO1199 (TGD4003)	2(L - 44)
AF	CO0237 (TGD4006)	J.2.x

52 MM

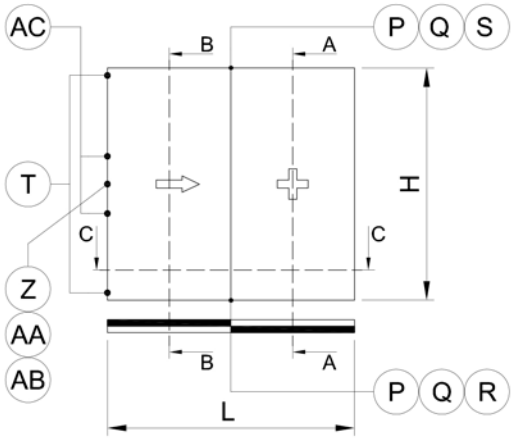
AC
B
A
P
Q
S
T
H
C
C
Z
AA
AB
B
A
P
Q
R
L

A-A

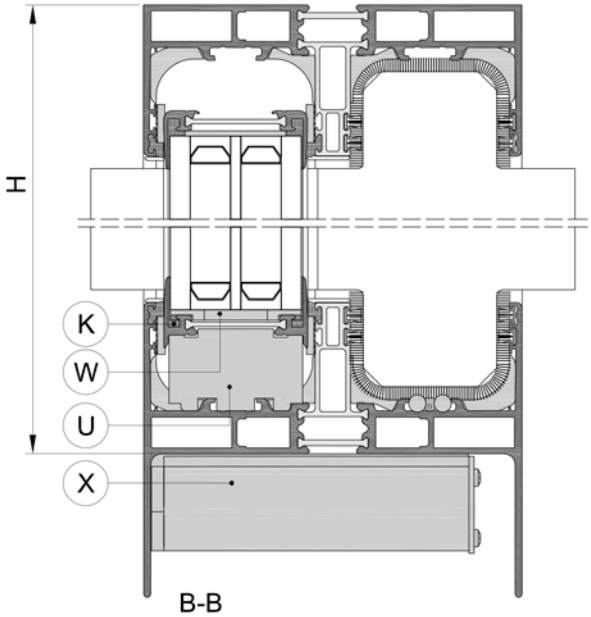
H
K
W
U
X

B-B

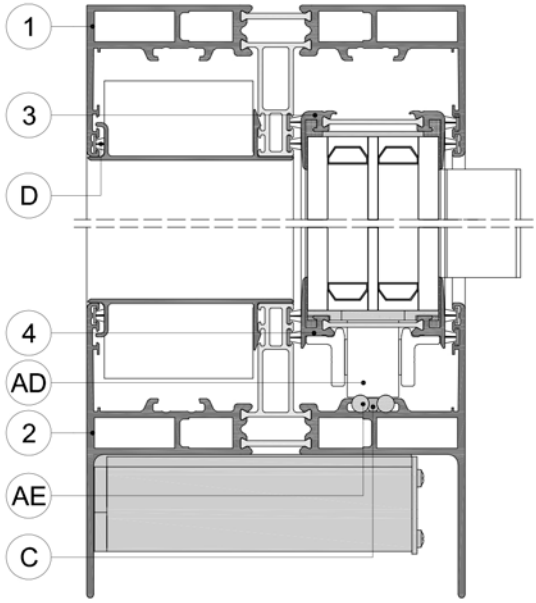
1
3
D
4
AD
2
AE
C

C-C

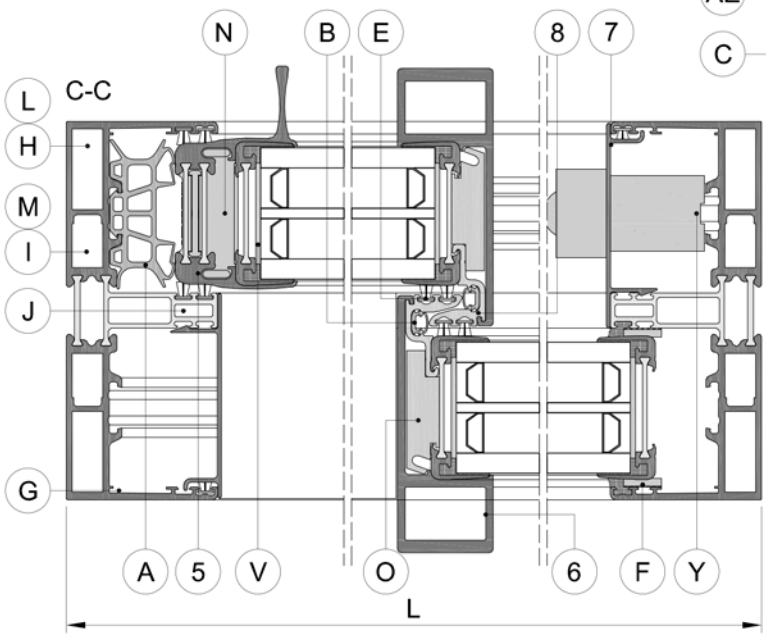
N
B
E
8
7
L
H
M
I
J
G
A
5
V
O
6
F
Y
L

Cuting measure plans

2 - Rail - Slide - Fix

	Profiles		Quantity	Shape	Sawing length	
1		D9K025 (TGD1100)	2 1		H L	
2		D9K029 (TGD1101)	1		L + 114	
3		D9V005 (TGD1201)	4 2		H - 89 L/2 - 48.5	
4		D9V004 (TGD1200)	2		L/2 - 48.5	
5		D9V007 (TGD1202)	1		H - 140	
6		D9V113 (TGD2200)	2		H - 53	
7		D9A050 (TGD2401)	2 1		H - 60 L/2 - 67.5	
8	L=7000mm	KU0012 (TGD4004)	2		H - 130	
	Glass dimensions				L/2 - 68.5	H - 109

	Accessories	Quantity
A	RU9152 (TGD5003)	H - 47
B	RU9121 (TGD5002)	2(H - 130)
C	RU9154 (TGD5005)	L - 44
D	MD0410 (TGD5008)	6(H - 86) 10(L - 86)
E	MD0410 (TGD5008)	4(H - 130)
F	BT0007 (TGD5000)	2(H - 80) 4(L/2 - 40)
G	HV4M12 (TGD3607)	8
H	HV9M16 (TGD3602)	8
I	HV9M17 (TGD3603)	8
J	CO0153 (TGD3600)	4
K	HV4K05 (TGD3606)	16
L	VS9973 (TGD3812)	8
M	VS9974 (TGD3813)	8
N	CO0199 (TGD3814)	2
O	CO0207 (TGD3804)	J.3.x

	Accessories	Quantity
P	CO0203 (TGD3608)	4
Q	CO0204 (TGD3805)	4
R	VS1420 (TGD3809)	1
S	CO1131 (TGD3810)	1
T	CO0210 (TGD3806)	2
U	CO0198 (TGD3808)	J.9.x
V	93082 (TGD3816)	J.2.x
W	CO0208 (TGD3800)	4
X	CO0205 (TGD3802)	J.6.x
Y	CO0180 (TGD3610)	1
Z	CO0214 (TGD6001)	1
AA	SF3054 (TGD6002)	1
AB	ZB0052 (TGD6004)	1
AC	SV2088 (TGD6012)	2
AD	SV0037 (TGD6014)	2
AE	CO1199 (TGD4003)	2(L - 44)

52 MM (WITH FIX GLASS)

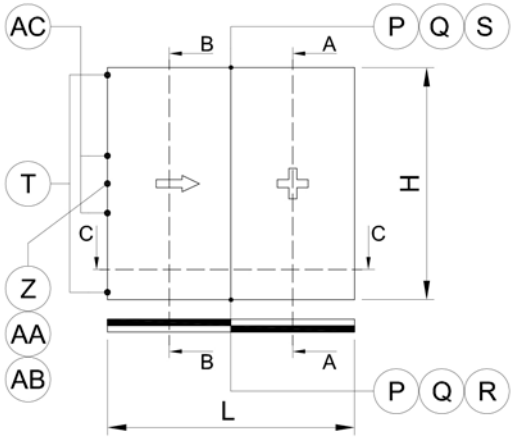

A-A

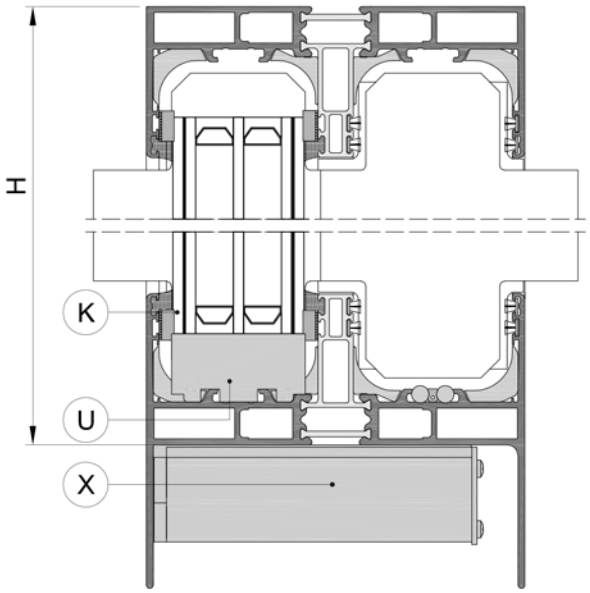

B-B

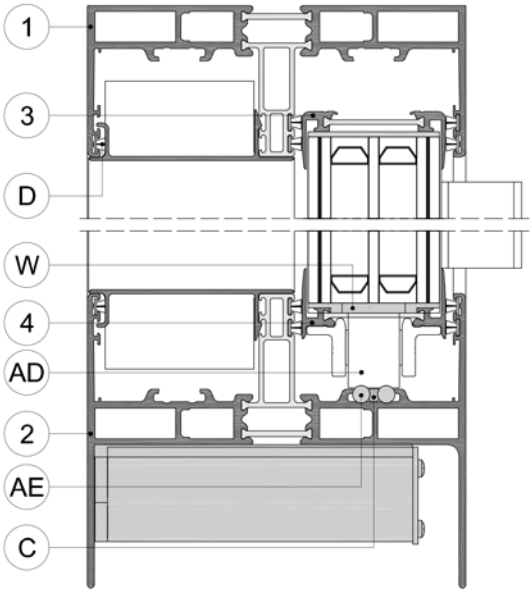

C-C

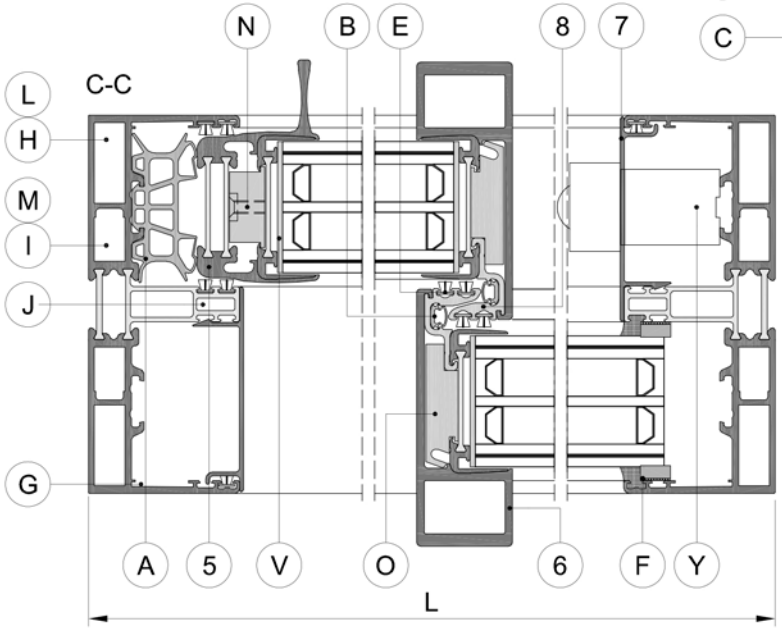

Cuting measure plans

2 - Rail - Slide - Fix

	Profiles		Quantity	Shape	Sawing length
1		D9K025 (TGD1100)	2 1		H L
2		D9K029 (TGD1101)	1		L + 114
3		D9V005 (TGD1201)	4 1 1		H - 89 L/2 - 44.5 H - 88
4		D9V004 (TGD1200)	2		L/2 - 44.5
5		D9V007 (TGD1202)	1		H - 140
6		D9V113 (TGD2200)	2		H - 53
7		D9A050 (TGD2401)	2 2		H - 60 L/2 - 65.5
8	L=7000mm	KU0012 (TGD4004)	2		H - 130
	Glass dimensions			Slide	L/2 -64.5 / H - 109
				Fix	L/2 -64.5 / H - 88

	Accessories	Quantity
A	RU9152 (TGD5003)	H - 47
B	RU9121 (TGD5002)	2(H - 130)
C	RU9154 (TGD5005)	L - 44
D	MD0410 (TGD5008)	6(H - 86) 10(L - 86)
E	MD0410 (TGD5008)	4(H - 130)
F	BT0007 (TGD5000)	2(H - 80) 4(L/2 - 40)
G	HV4M12 (TGD3607)	8
H	HV9M16 (TGD3602)	8
I	HV9M17 (TGD3603)	8
J	CO0153 (TGD3600)	4
K	HV4K05 (TGD3606)	16
L	VS9973 (TGD3812)	8
M	VS9974 (TGD3813)	8
N	CO0199 (TGD3814)	2
O	CO0207 (TGD3804)	J.3.x

	Accessories	Quantity
P	CO0203 (TGD3608)	4
Q	CO0204 (TGD3805)	4
R	VS1420 (TGD3809)	1
S	CO1131 (TGD3810)	1
T	CO0210 (TGD3806)	2
U	CO2299	J.9.x
V	93082 (TGD3816)	J.2.x
W	CO0208 (TGD3800)	2
X	CO0205 (TGD3802)	J.6.x
Y	CO0180 (TGD3610)	1
Z	CO0214 (TGD6001)	1
AA	SF3054 (TGD6002)	1
AB	ZB0052 (TGD6004)	1
AC	SV2088 (TGD6012)	2
AD	SV0037 (TGD6014)	2
AE	CO1199 (TGD4003)	2(L - 44)

4 VENTS 46 MM

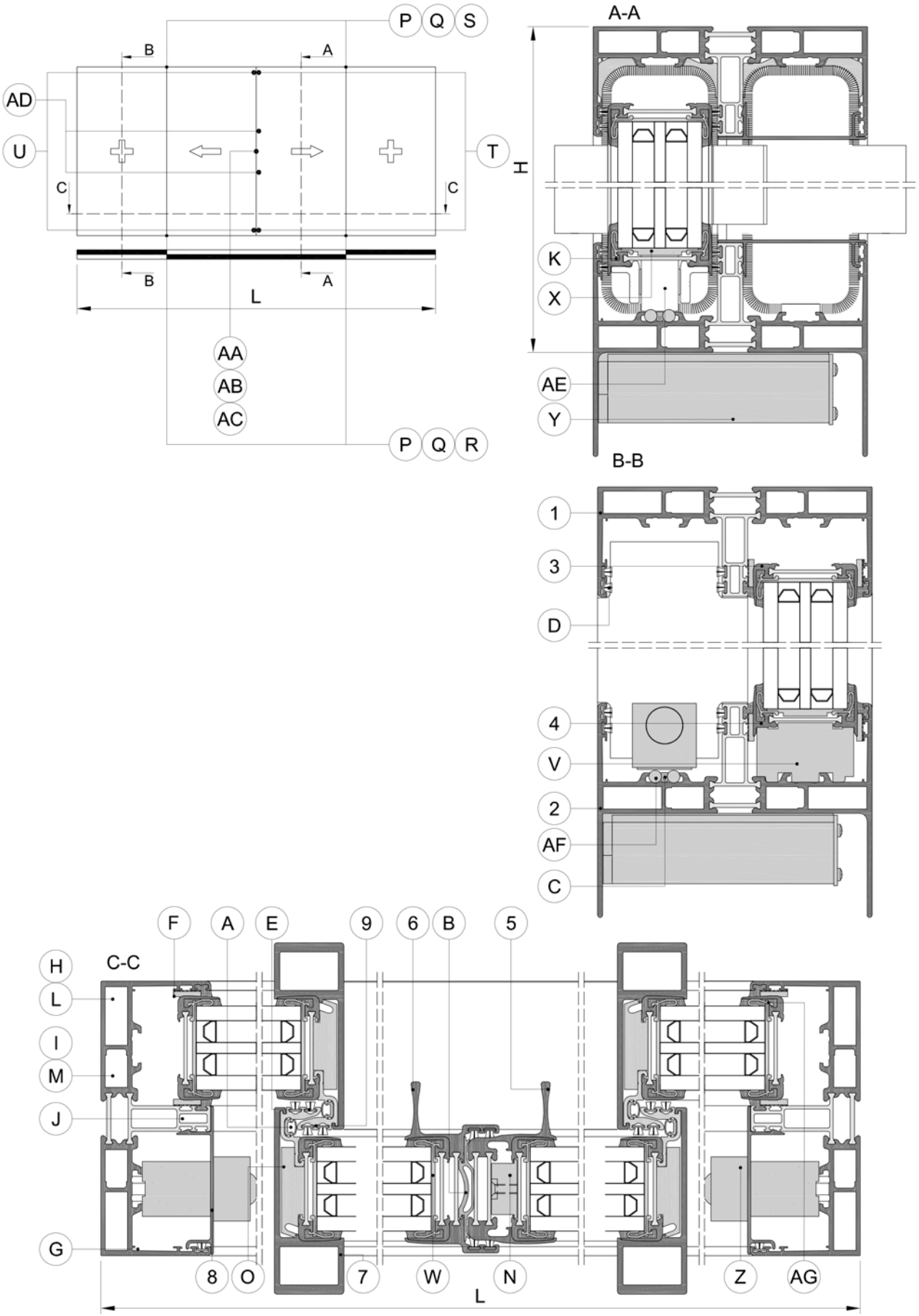
P Q S
B
A
AD
U
T
C
C
B
A
L
AA
AB
AC
P Q R
A-A
H
K
X
AE
Y
B-B
1
3
D
4
V
2
AF
C
F A E 9 6 B 5
H
C-C
L
I
M
J
G
8 O 7 W N Z AG
L

Cuting measure plans

2 - Rail - Slide - Fix

	Profiles		Quantity	Shape	Sawing length	
1		D9K025 (TGD1100)	2 1		H L	
2		D9K029 (TGD1101)	1		L + 114	
3		D9V005 (TGD1201)	8 4		H - 89 L/4 - 23.5	
4		D9V004 (TGD1200)	4		L/4 - 23.5	
5		D9V007 (TGD1202)	1		H - 140	
6		D9V010 (TGD1204)	1		H - 140	
7		D9V113 (TGD2200)	4		H - 53	
8		D9A050 (TGD2401)	2 1		H - 60 L/2 - 62	
9		KU0012 (TGD4004)	2		H - 130	
	Glass dimensions				L/4 - 43.5	H - 109

	Accessories	Quantity
A	RU9121 (TGD5002)	2(H - 130)
B	RU9153 (TGD5004)	H - 60
C	RU9154 (TGD5005)	L - 44
D	MD0410 (TGD5008)	2(H - 86) 10(L - 86)
E	MD0410 (TGD5008)	12(H - 130)
F	BT0007 (TGD5000)	4(H - 80) 8(L/4 - 20)
G	HV4M12 (TGD3607)	8
H	HV9M16 (TGD3602)	8
I	HV9M17 (TGD3603)	8
J	CO0153 (TGD3600)	4
K	HV4K05 (TGD3606)	32
L	VS9973 (TGD3812)	8
M	VS9974 (TGD3813)	8
N	CO0199 (TGD3814)	2
O	CO0207 (TGD3804)	J.3.x
P	CO0203 (TGD3608)	8

	Accessories	Quantity
Q	CO0204 (TGD3805)	8
R	VS1420 (TGD3809)	2
S	CO1131 (TGD3810)	2
T	CO0210 (TGD3806)	2
U	CO0219 (TGD3807)	2
V	CO0198 (TGD3808)	J.9.x
W	93082 (TGD3816)	J.2.x
X	CO0208 (TGD3800)	8
Y	CO0205 (TGD3802)	J.6.x
Z	CO0180 (TGD3610)	2
AA	CO0214 (TGD6001)	1
AB	SF3054 (TGD6002)	1
AC	ZB0052 (TGD6004)	1
AD	SV2089 (TGD6013)	2
AE	SV0037 (TGD6014)	4
AF	CO1199 (TGD4003)	2(L - 44)
AG	CO0237 (TGD4006)	J.2.x

4 VENTS 52 MM

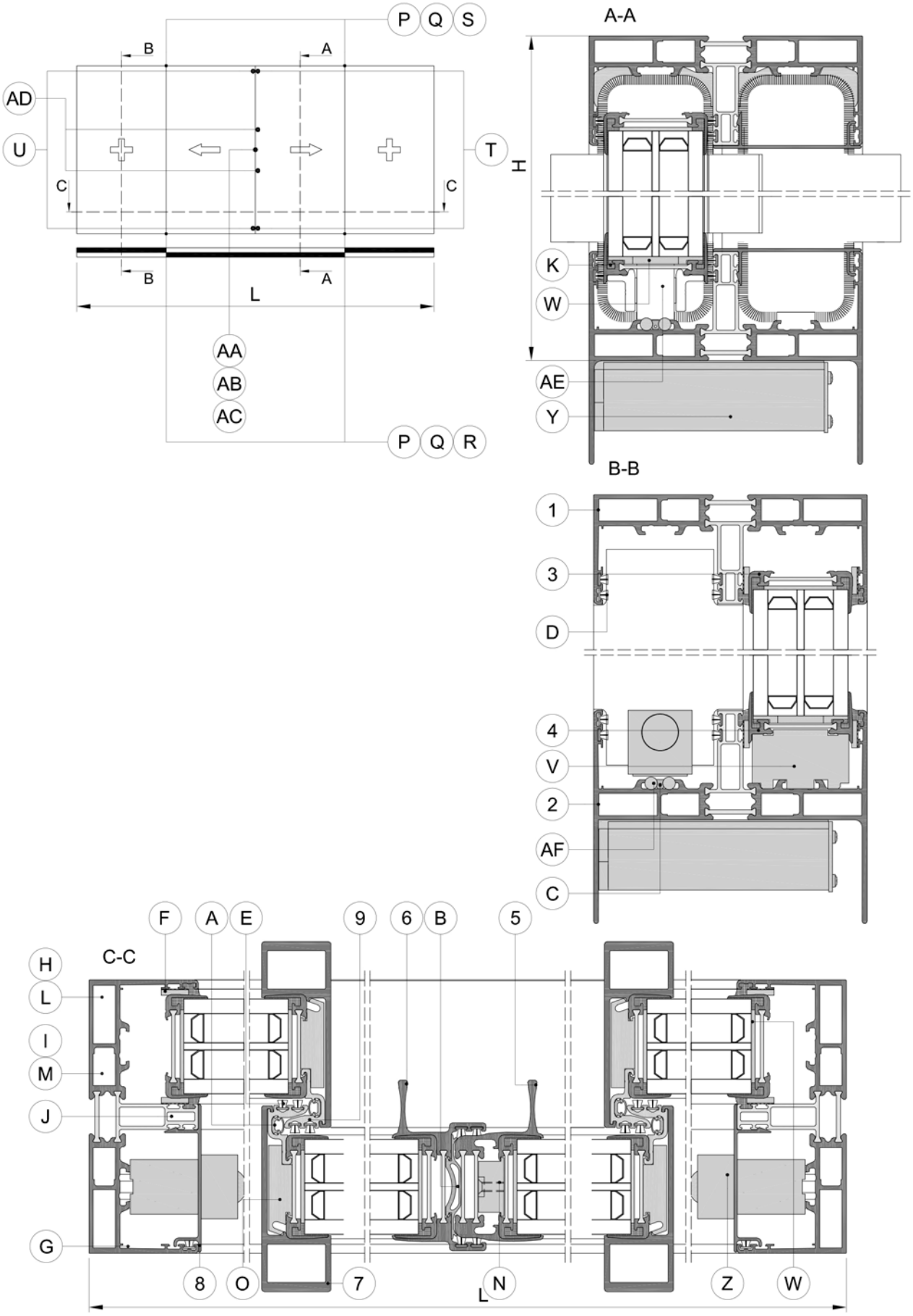
P Q S
B
A
AD
U
T
C
C
B
A
L
AA
AB
AC
P Q R
A-A
H
K
W
AE
Y
B-B
1
3
D
4
V
2
AF
C
F A E
9 6 B
5
C-C
H
L
I
M
J
G
8 O
7
N
L
Z W

Cuting measure plans

2 - Rail - Slide - Fix

	Profiles		Quantity	Shape	Sawing length	
1		D9K025 (TGD1100)	2 1		H L	
2		D9K029 (TGD1101)	1		L + 114	
3		D9V005 (TGD1201)	8 4		H - 89 L/4 - 23.5	
4		D9V004 (TGD1200)	4		L/4 - 23.5	
5		D9V007 (TGD1202)	1		H - 140	
6		D9V010 (TGD1204)	1		H - 140	
7		D9V113 (TGD2200)	4		H - 53	
8		D9A050 (TGD2401)	2 1		H - 60 L/2 - 62	
9		KU0012 (TGD4004)	4		H - 130	
	Glass dimensions				L/4 - 43.5	H - 109

	Accessories	Quantity
A	RU9121 (TGD5002)	2(H - 130)
B	RU9153 (TGD5004)	H - 60
C	RU9154 (TGD5005)	L - 44
D	MD0410 (TGD5008)	2(H - 86) 10(L - 86)
E	MD0410 (TGD5008)	12(H - 130)
F	BT0007 (TGD5000)	4(H - 80) 8(L/4 - 20)
G	HV4M12 (TGD3607)	8
H	HV9M16 (TGD3602)	8
I	HV9M17 (TGD3603)	8
J	CO0153 (TGD3600)	4
K	HV4K05 (TGD3606)	32
L	VS9973 (TGD3812)	8
M	VS9974 (TGD3813)	8
N	CO0199 (TGD3814)	2
O	CO0207 (TGD3804)	J.3.x
P	CO0203 (TGD3608)	8

	Accessories	Quantity
Q	CO0204 (TGD3805)	8
R	VS1420 (TGD3809)	2
S	CO1131 (TGD3810)	2
T	CO0210 (TGD3806)	2
U	CO0219 (TGD3807)	2
V	CO0198 (TGD3808)	J.9.x
W	93082 (TGD3816)	J.2.x
X	CO0208 (TGD3800)	8
Y	CO0205 (TGD3802)	J.6.x
Z	CO0180 (TGD3610)	2
AA	CO0214 (TGD6001)	1
AB	SF3054 (TGD6002)	1
AC	ZB0052 (TGD6004)	1
AD	SV2089 (TGD6013)	2
AE	SV0037 (TGD6014)	4
AF	CO1199 (TGD4003)	2(L - 44)

3 VENTS 46 MM

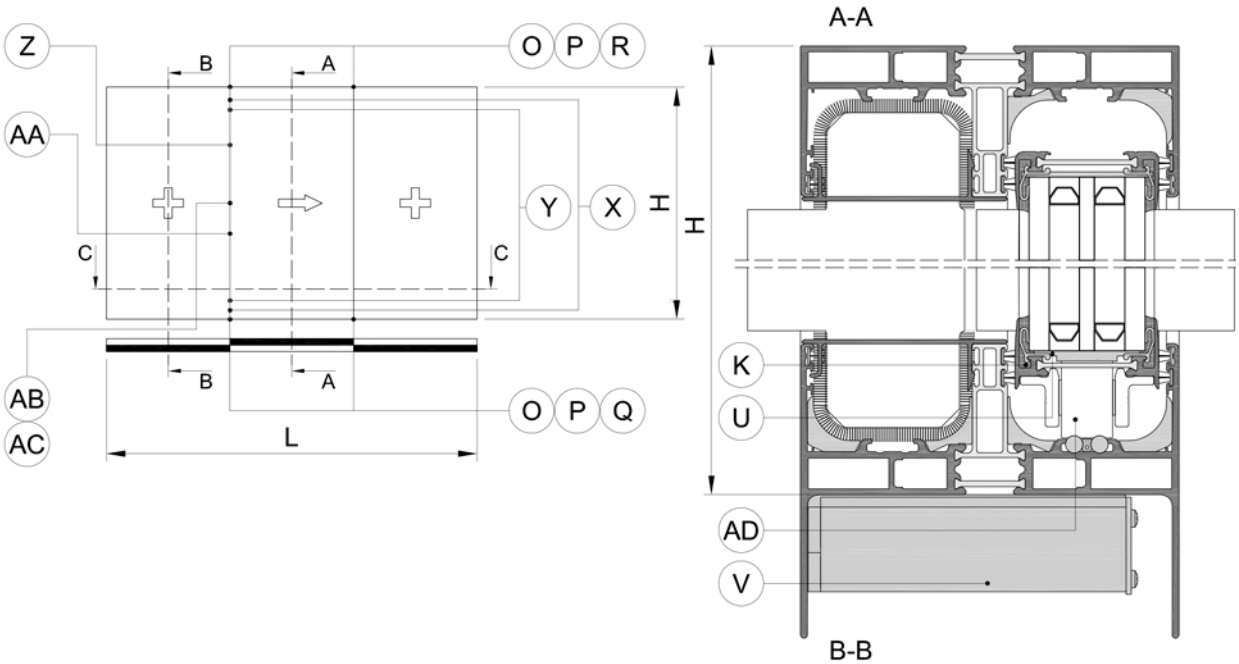
Z
AA
AB
AC
B
A
C
O P R
Y X
H
O P Q
L
A-A
K
U
AD
V

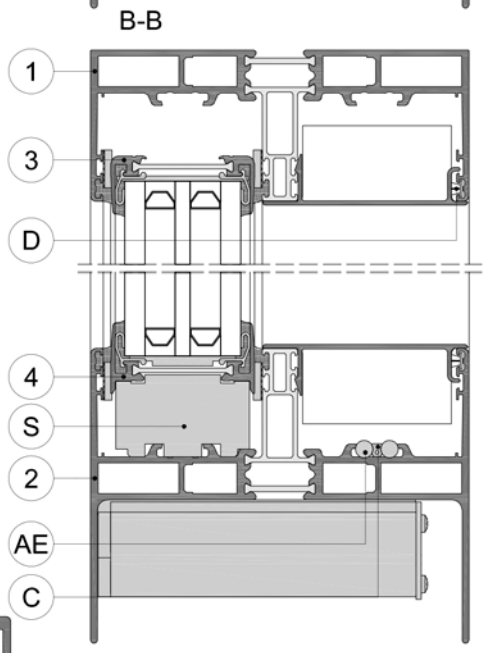
B-B
1
3
D
4
S
2
AE
C

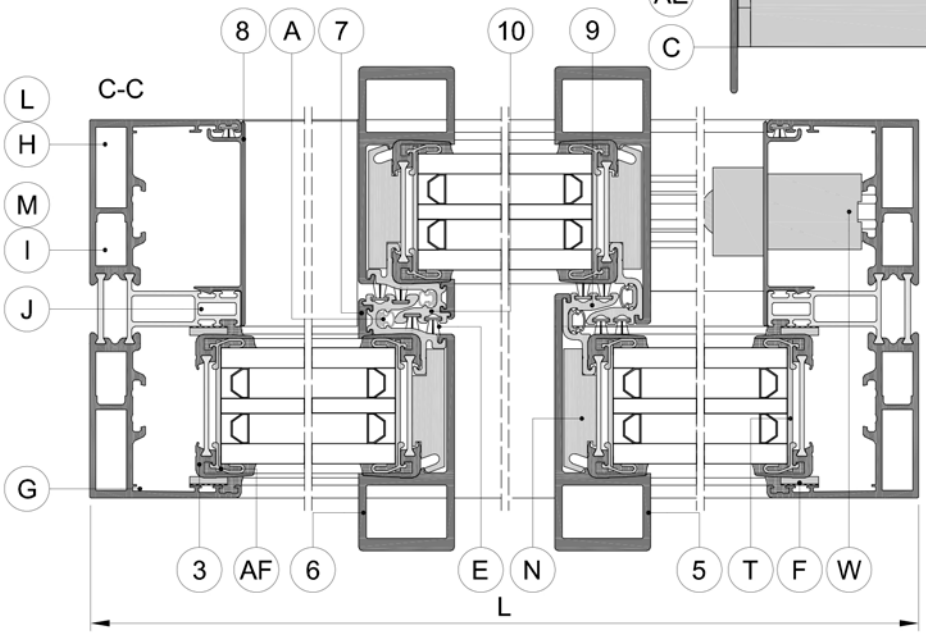
C-C
8 A 7
10 9
L
H
M
I
J
G
3 AF 6
E N
5 T F W
L

Cuting measure plans

2 - Rail - Slide - Fix

	Profiles		Quantity	Shape	Sawing length	
1		D9K025 (TGD1100)	2 1		H L	
2		D9K029 (TGD1101)	1		L + 114	
3		D9V005 (TGD1201)	4 2		H - 89 L/3 - 20	
4		D9V004 (TGD1200)	2		L/3 - 20	
5		D9V113 (TGD2200)	2		H - 53	
6		D9V119 (TGD2202)	2		H - 53	
7		D8C003 (TGD2404)	2		H - 130	
8		D9A050 (TGD2401)	2 2 2		H - 60 L/3 - 70 L/3 - 65	
9		KU0012 (TGD4004)	2		H - 130	
10		KU0013 (TGD4001)	2		H - 130	
	Glass dimensions				L/3 - 40	H - 109

	Accessories	Quantity
A	RU0105 (TGD5001)	2(H - 130)
B	RU9121 (TGD5002)	2(H - 130)
C	RU9154 (TGD5005)	L - 44
D	MD0410 (TGD5008)	2(H - 86) 2(L/2 - 22) 2(L - 86)
E	MD0410 (TGD5008)	4(H - 130)
F	BT0007 (TGD5000)	4(H - 80) 8(L/3 - 20)
G	HV4M12 (TGD3607)	8
H	HV9M16 (TGD3602)	8
I	HV9M17 (TGD3603)	8
J	CO0153 (TGD3600)	4
K	HV4K05 (TGD3606)	24
L	VS9973 (TGD3812)	8
M	VS9974 (TGD3813)	8
N	CO0207 (TGD3804)	J.3.x
O	CO0203 (TGD3608)	8

	Accessories	Quantity
P	CO0204 (TGD3805)	8
Q	VS1420 (TGD3809)	2
R	CO1131 (TGD3810)	2
S	CO0198 (TGD3808)	J.9.x
T	93082 (TGD3816)	J.2.x
U	CO0208 (TGD3800)	6
V	CO0205 (TGD3802)	J.6.x
W	CO0180 (TGD3610)	1
X	CO1151 (TGD6008)	2
Y	VS9979 (TGD3818)	4
Z	SF9065 (TGD6010)	H - 1150 - 187.5
AA	SF9065 (TGD6010)	1150 - 88.5
AB	SF2018 (TGD6009)	1
AC	SF9066 (TGD6011)	1
AD	SV0037 (TGD6014)	2
AE	CO1199 (TGD4003)	2(L - 44)
AF	CO0237 (TGD4006)	J.2.x

3 VENTS 52 MM

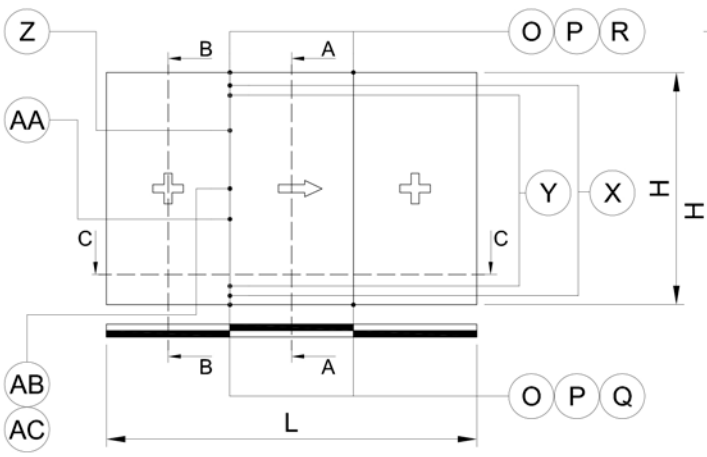
Z
AA
AB
AC
B
A
C
O P R
Y X
H
O P Q
L

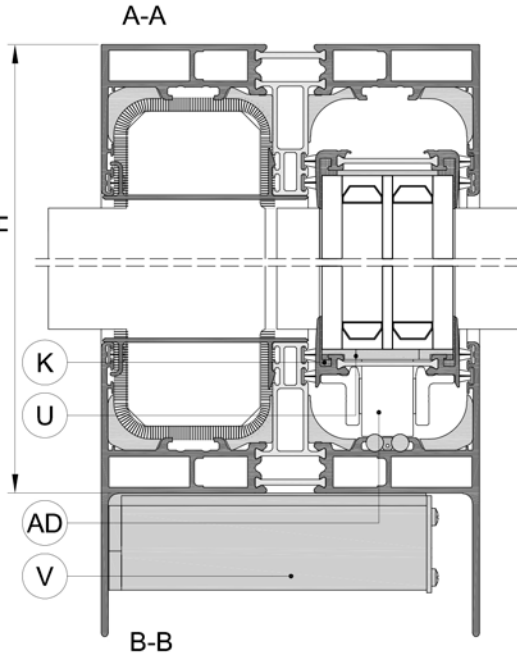
A-A
K
U
AD
V

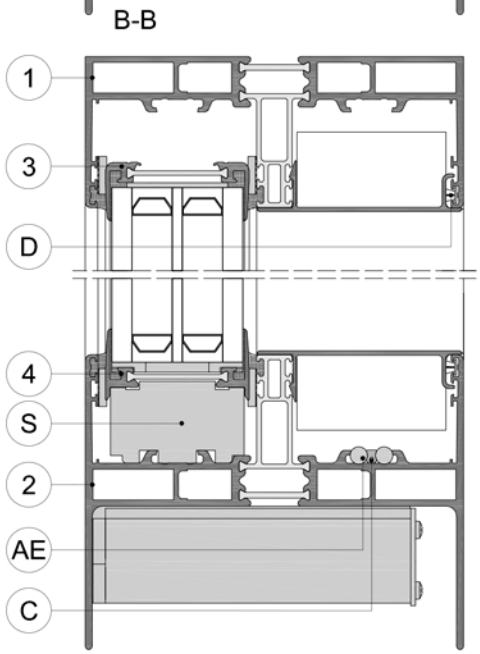
B-B
1
3
D
4
S
2
AE
C

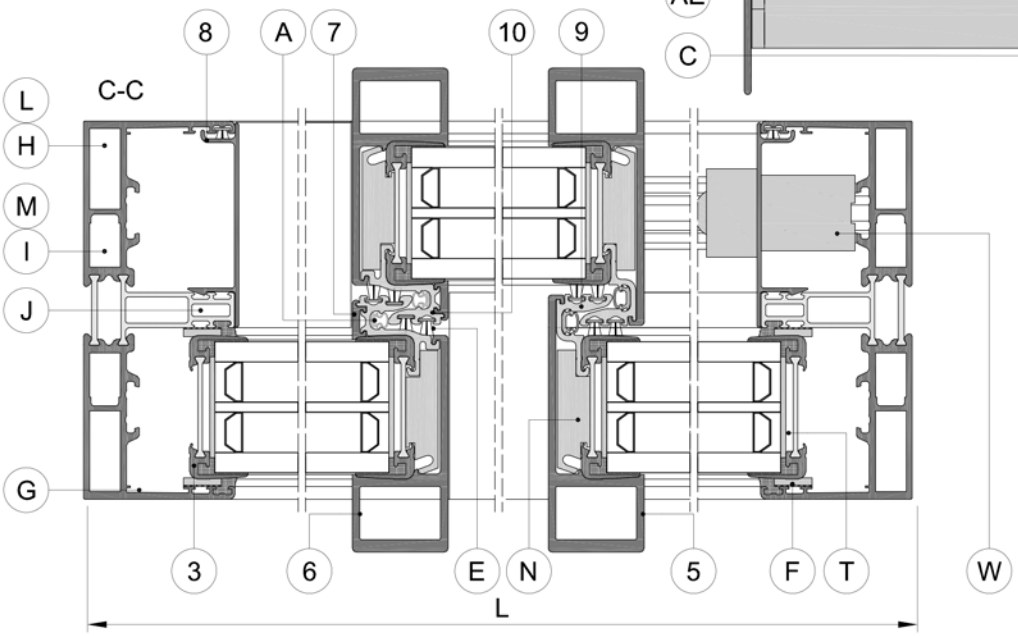
C-C
8
A
7
10
9
L
H
M
I
J
G
3
6
E
N
5
F
T
W
L

Cuting measure plans

2 - Rail - Slide - Fix

	Profiles		Quantity	Shape	Sawing length
1		D9K025 (TGD1100)	2 1		H L
2		D9K029 (TGD1101)	1		L + 114
3		D9V005 (TGD1201)	6 3		H - 89 L/3 - 20
4		D9V004 (TGD1200)	2		L/3 - 20
5		D9V113 (TGD2200)	2		H - 53
6		D9V119 (TGD2202)	2		H - 53
7		D8C003 (TGD2404)	2		H - 130
8		D9A050 (TGD2401)	2 2		H - 60 L/3 - 70
9		KU0012 (TGD4004)	2		H - 130
10		KU0013 (TGD4001)	2		H - 130
	Glass dimensions				L3 - 40 / H - 109

	Accessories	Quantity
A	RU0105 (TGD5001)	2(H - 130)
B	RU9121 (TGD5002)	2(H - 130)
C	RU9154 (TGD5005)	L - 44
D	MD0410 (TGD5008)	2(H - 86) 2(L/2 - 22) 2(L - 86)
E	MD0410 (TGD5008)	4(H - 130)
F	BT0007 (TGD5000)	4(H - 80) 8(L/3 - 20)
G	HV4M12 (TGD3607)	8
H	HV9M16 (TGD3602)	8
I	HV9M17 (TGD3603)	8
J	CO0153 (TGD3600)	4
K	HV4K05 (TGD3606)	24
L	VS9973 (TGD3812)	8
M	VS9974 (TGD3813)	8
N	CO0207 (TGD3804)	J.3.x
O	CO0203 (TGD3608)	8

	Accessories	Quantity
P	CO0204 (TGD3805)	8
Q	VS1420 (TGD3809)	2
R	CO1131 (TGD3810)	2
S	CO0198 (TGD3808)	J.9.x
T	93082 (TGD3816)	J.2.x
U	CO0208 (TGD3800)	6
V	CO0205 (TGD3802)	J.6.x
W	CO0180 (TGD3610)	1
X	CO1151 (TGD6008)	2
Y	VS9979 (TGD3818)	4
Z	SF9065 (TGD6010)	H - 1150 - 187.5
AA	SF9065 (TGD6010)	1150 - 88.5
AB	SF2018 (TGD6009)	1
AC	SF9066 (TGD6011)	1
AD	SV0037 (TGD6014)	2
AE	CO1199 (TGD4003)	2(L - 44)

46 мм

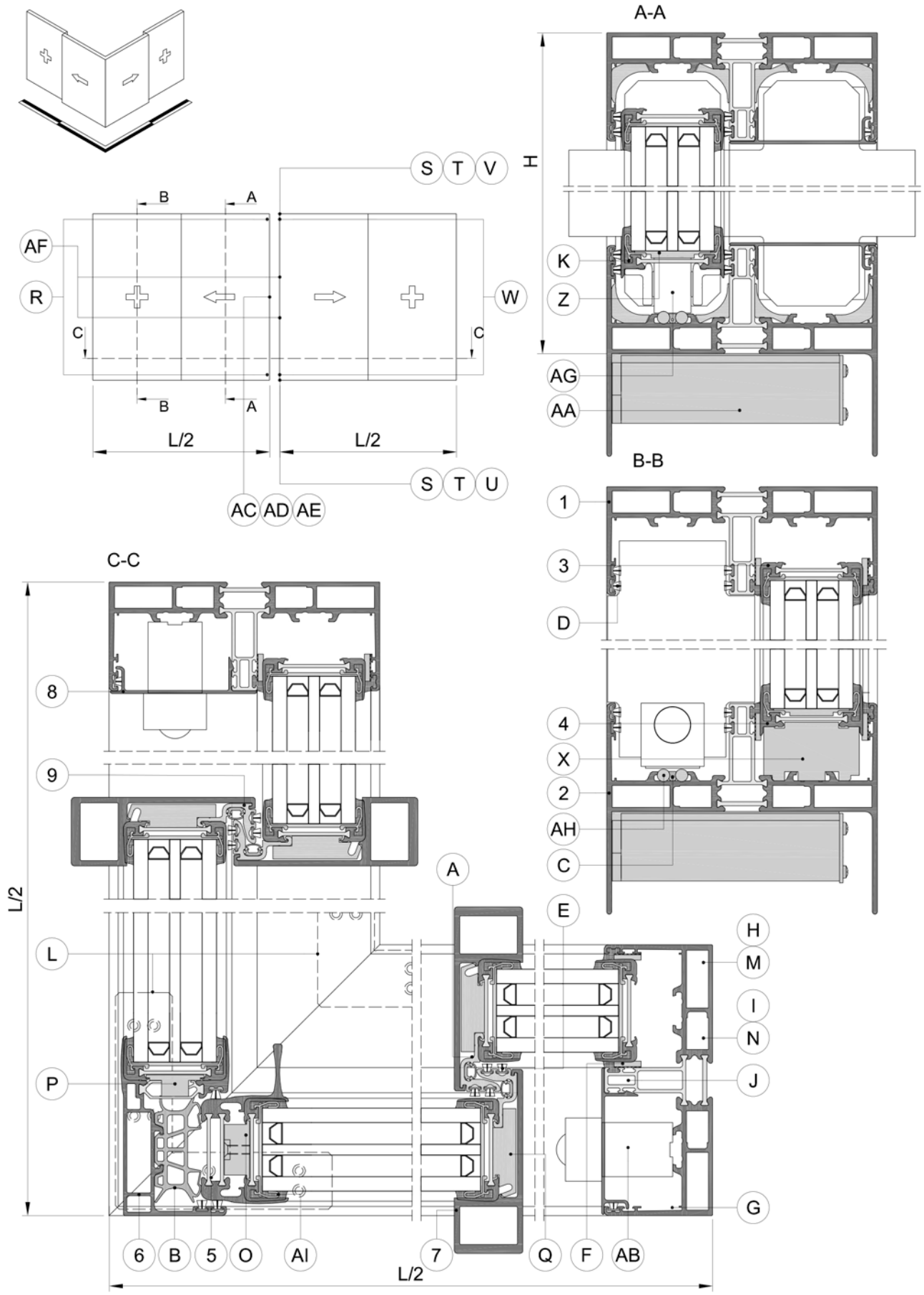
A-A
B-B
C-C
S T V
S T U
AC AD AE
AF
R
W
B
A
C
L/2
H
K
Z
AG
AA
1
3
D
4
X
2
AH
C
E
8
9
L
P
A
H
M
I
N
J
G
6 B 5 O AI
7
Q F AB

Cuting measure plans

2 - Rail - Corner solution

	Profiles		Quantity	Shape	Sawing length	
1		D9K025 (TGD1100)	2 2		H L/2	
2		D9K029 (TGD1101)	2		L/2	
3		D9V005 (TGD1201)	8 4		H - 89 L/4 - 52.5	
4		D9V004 (TGD1200)	4		L/4 - 52.5	
5		D9V007 (TGD1202)	1		H - 140	
6		D9C001 (TGD1210)	1		H - 60	
7		D9V113 (TGD2200)	4		H - 53	
8		D9A050 (TGD2401)	2 2		H - 60 L/4 - 70	
9		KU0012 (TGD4004)	8		H - 130	
	Glass dimensions				L/4 - 72.5	H - 109

	Accessories	Quantity
A	RU9121 (TGD5002)	2(H - 130)
B	RU9152 (TGD5003)	H - 60
C	RU9154 (TGD5005)	2(L/2 - 53,5)
D	MD0410 (TGD5008)	2(H - 86) 10(L - 46,5)
E	MD0410 (TGD5008)	11(H - 130)
F	BT0007 (TGD5000)	4(H - 80) 8(L/4 - 50)
G	HV4M12 (TGD3607)	8
H	HV9M16 (TGD3602)	8
I	HV9M17 (TGD3603)	8
J	CO0153 (TGD3600)	4
K	HV4K05 (TGD3606)	32
L	HV9N03 (TGD3605)	4
M	VS9973 (TGD3812)	12
N	VS9974 (TGD3813)	12
O	CO0199 (TGD3814)	2
P	CO0211 (TGD3815)	2
Q	CO0207 (TGD3804)	J.3.x

	Accessories	Quantity
R	CO0209 (TGD3623)	2
S	CO0203 (TGD3608)	8
T	CO0204 (TGD3805)	8
U	VS1420 (TGD3809)	2
V	CO1131 (TGD3810)	2
W	CO0210 (TGD3806)	2
X	CO0198 (TGD3808)	J.9.x
Y	93082 (TGD3816)	J.2.x
Z	CO0208 (TGD3800)	8
AA	CO0205 (TGD3802)	J.6.x
AB	CO0180 (TGD3610)	2
AC	CO0214 (TGD6001)	1
AD	SF3054 (TGD6002)	1
AE	ZB0052 (TGD6004)	1
AF	SV2088 (TGD6012)	2
AG	SV0037 (TGD6014)	4
AH	CO1199 (TGD4003)	2(L/2 - 53,5) 2(L/2 - 63,5)
AI	CO0237 (TGD4006)	J.2.x

52 MM

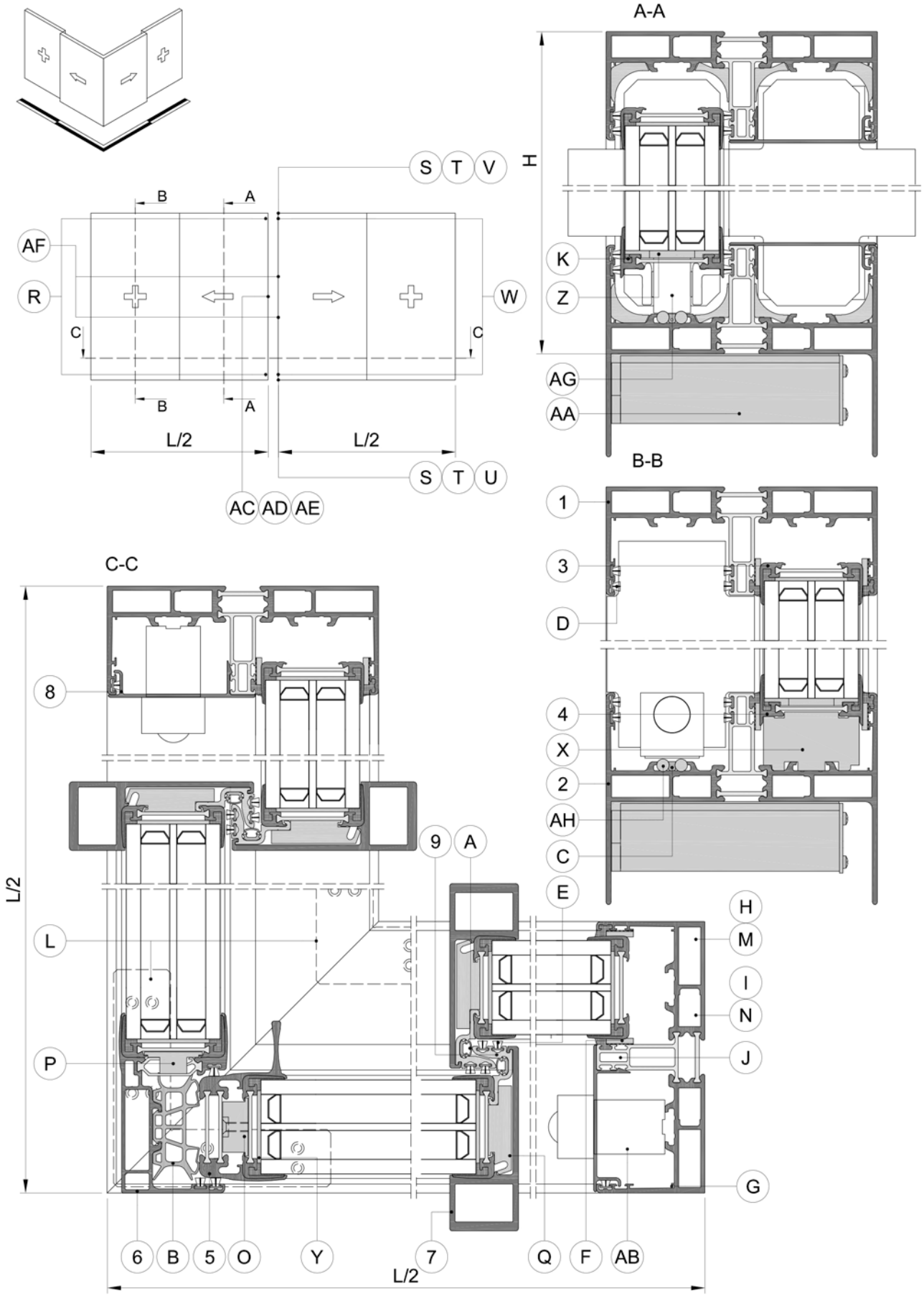
A-A
B-B
C-C
S T V
S T U
AC AD AE
AF
R
W
B
A
C
L/2
H
K
Z
AG
AA
1
3
D
4
X
2
AH
C
E
8
9
A
L
P
H
M
I
N
J
G
6 B 5 O Y 7 Q F AB
L/2

Cuting measure plans

2 - Rail - Corner solution

	Profiles		Quantity	Shape	Sawing length	
1		D9K025 (TGD1100)	2 2		H L/2	
2		D9K029 (TGD1101)	2		L/2	
3		D9V005 (TGD1201)	8 4		H - 89 L/4 - 52.5	
4		D9V004 (TGD1200)	4		L/4 - 52.5	
5		D9V007 (TGD1202)	1		H - 140	
6		D9C001 (TGD1210)	1		H - 60	
7		D9V113 (TGD2200)	4		H - 53	
8		D9A050 (TGD2401)	2 2		H - 60 L/4 - 70	
9		KU0012 (TGD4004)	4		H - 130	
	Glass dimensions				L/4 - 72.5	H - 109

	Accessories	Quantity
A	RU9121 (TGD5002)	2(H - 130)
B	RU9152 (TGD5003)	H - 60
C	RU9154 (TGD5005)	2(L/2 - 53,5)
D	MD0410 (TGD5008)	2(H - 86) 10(L - 46,5)
E	MD0410 (TGD5008)	11(H - 130)
F	BT0007 (TGD5000)	4(H - 80) 8(L/4 - 50)
G	HV4M12 (TGD3607)	8
H	HV9M16 (TGD3602)	8
I	HV9M17 (TGD3603)	8
J	CO0153 (TGD3600)	4
K	HV4K05 (TGD3606)	32
L	HV9N03 (TGD3605)	4
M	VS9973 (TGD3812)	12
N	VS9974 (TGD3813)	12
O	CO0199 (TGD3814)	2
P	CO0211 (TGD3815)	2
Q	CO0207 (TGD3804)	J.3.x

	Accessories	Quantity
R	CO0209 (TGD3623)	2
S	CO0203 (TGD3608)	8
T	CO0204 (TGD3805)	8
U	VS1420 (TGD3809)	2
V	CO1131 (TGD3810)	2
W	CO0210 (TGD3806)	2
X	CO0198 (TGD3808)	J.9.x
Y	93082 (TGD3816)	J.2.x
Z	CO0208 (TGD3800)	8
AA	CO0205 (TGD3802)	J.6.x
AB	CO0180 (TGD3610)	2
AC	CO0214 (TGD6001)	1
AD	SF3054 (TGD6002)	1
AE	ZB0052 (TGD6004)	1
AF	SV2088 (TGD6012)	2
AG	SV0037 (TGD6014)	4
AH	CO1199 (TGD4003)	2(L/2- 53,5) 2(L/2- 63,5)

Hardware & assembly drawings

GENERAL ASSEMBLY- AND MOUNTING SPECIFICATIONS FOR ALUMINIUM CABINET WORK

In addition to the techniques and terms determined by the official norms (national and European), a few basic rules need to be adhered to when assembling and installing a window in order to produce a qualitative edifying product.
In the following, non-limited list, specifications are given for the construction, manufacture and placing of window-, door- and facade-elements.

1. *Sawing the profiles*

In order to get a good mitre, it is important to fix well and position the profile on the saw bench.
The profile must always be positioned in such a way that the sides of the profile are pressed thoroughly against the saw bench and the possibly used pillow bearings. The profile must be fixed in such a way that it does not have the tendency to cant over or distort.
e.g.: Typical tightening of a wing profile:

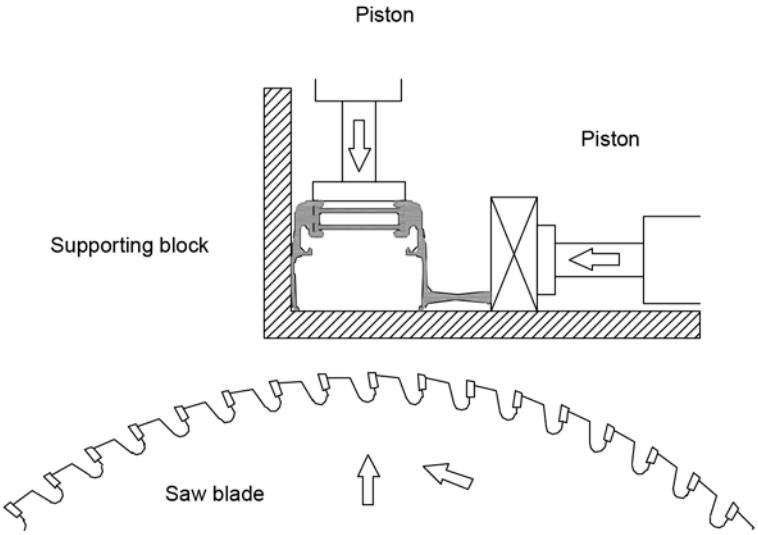

2. *Punching, milling or drilling profiles*

After the profiles have been treated, the released plain surfaces have to be deburred, defatted and treated with an anti-corrosion product.
In addition, attention needs to be paid during the treatment that no damage occurs to the surrounding coating. This is because of the danger of filiform corrosion.
Typical examples of these processes are:

- Drilled, milled or punched drainage-and air holes
- Millings or punchings for profile connections
- Drilled holes for profile fastening
- ...

3. *Profile connections*

The mitres and T-connections need to be luted thoroughly with an approved neutral, elastic seal kit, in such a way that the air tightness and impermeability requirements are met.
When imposing requirements for profile connections, a distinction is made between:

- Profile connections in factory-composed windows/doors/aluminium constructions:

  The seals on the viewable sides may not be larger then 0.3 mm. The inequality of profile connections, measured in the construction surface at the groove welds and T-connections, may not be higher then the extrusion tolerance as described in EN 12020.
  As a consequence of the unevenness (hollowness and arc height) of the profiles, it is not always possible to meet the requirements on the inequality of the profile connections; because of this the inequality may not be above 0.5 mm.

Also belonging to this group are the interlinked profiles for the assembly of windows: post profile, doorpost finishing, alteration profiles, frame sills, ... These always need to be sealed off air and watertight with a neutral, elastic seal kit. For some of the specific seals, see the relevant details in the catalog.

•Profile connections for parts connected during construction.

These contain glass facades, panel walls and construction parts connected during construction. With these, the clearance for profile connections will have to be chosen in such a way that with temperature differences the functioning will be undisturbed.
Joints between horizontal and vertical girders of glass facades may not be larger than 2mm, profile tolerances excluded, provided that larger joints need to be sealed off with a suitable sealing product.
Also belonging to this group are the linked profiles needed for the completion of the whole construction: corner posts, linked frames, strengthening profiles, linking profiles, These must always be sealed air and watertight in order to prevent water infiltration.

4. Drainage

It is important as much as possible to prevent rainwater from penetrating into the grooves.
The water carries dirt, which will form deposits in the grooves. Dirt and water tax the groove surroundings such as seals and surface treatments.
Measures to prevent rainwater penetration:

•Mitres and connections of vertical girders on horizontal girders, as well as the mutual connection of glazing - and sealing rubbers, need to have an appropriate, where needed elastic, seal in order to pre vent rainwater from penetrating.

•In order to prevent rainwater from being compressed into window constructions, the air pressure in the grooves needs to be the same as the exterior air pressure, so called pressure equalisation.
Therefore, the grooves need to have vents and need to be finished as air-tight as possible towards the inside. For more details on positioning, see further in the catalog.

•Use the prescribed water steps in order to guarantee good drainage.

•Adhere to the regulated distance between the drainage holes. For details on positioning, see further in the catalog.

•Drainage of the groove between the fixed frame and the opening part has to have a minimum of openings near the corners with a surface of minimum 50 mm² per opening, it either being a round opening with a diameter of minimum 8 mm, or a trench of 5mm by 15mm. (the pre-norm prEN 12488 currently lists 20 mm).

•With sash-windows, doors and curtain walls, the drainage can deviate from the above mentioned construction, with these, the regulations of the supplier need to be followed.

5. Seals

The pre-shaped seals for glazing, i.e. seals for water and air tightness and also acoustic seals, are usually produced in EPDM, TPE (thermoplastic rubber) or silicones.
The joints of these seals can be made as follows:

•Glued with sustainable compatible adhesive.

•Soldered frames or corners.

•All-round continuous seals.

Seals will have to be applied with an allowance in order to intercept shrinkage: ±1% extra length.

6. Instalation of the glazing

How well the window functions is dependent upon correctly wedging the glazing. The wedging is dependent upon the window type.
Use the by Sapa Building System prescribed glass pillow bearings, which are especially made custom to the specific series.

Hardware & assembly drawings

General directives

7. Carcass Anchoring

The anchorings (window anchors, plugs, etc...) are sufficient in number to resist normal air pressure and any other possible load with a safety coefficient of 3, without a permanent distortion.
They are fitted with a space of maximum 750 mm and on about 200 mm distance from every corner or girder of the fixed frame.
With movable window or door parts, placing the anchoring near the fulcrum, articulation or lock is recommended.

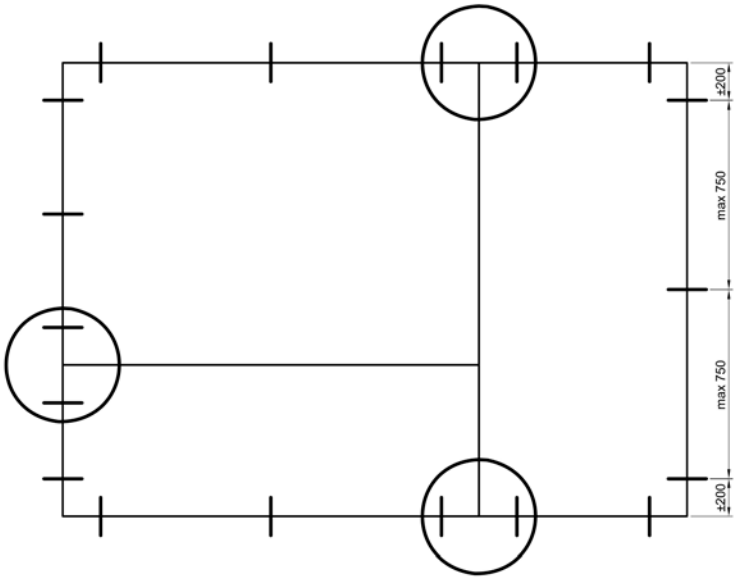

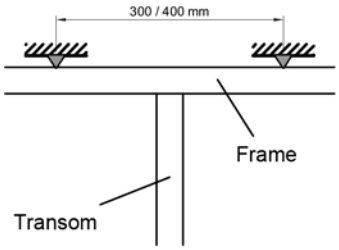

8. Contact with other materials.

If two metals with a different electrochemical potential are in contact with each other in a humid environment, the least precious metal will corrode. With the following materials in particular, measures will have to be taken in order to prevent corrosion: steal, copper, zinc and lead.
Some wood types, such as oak and nut, secrete a type of acid that can affect the metal, particularly in a humid environment or if the wood is not yet dry. Isolation is recommended in this case.
Plaster or cement in humid air or the spraying of plaster or cement have a superficial impact on the aluminium, which will show white marks after cleansing, even on anodised surfaces. Protecting the aluminium during the construction phase by applying a protective foil or tape with a non-aggressive adhesive is recommended. For the connection of the indoor and outdoor plasterwork with the aluminium construction, the use of a 'plasterwork stop profile' is recommended.
Other materials: one should be certain that materials used, which come into contact with the aluminium cannot produce chemical reactions with the aluminium and the protective layer (due to the surface treatment).

9. Density of the mitres

To assure the density of the mitres, corners and T-connectors must be glued with a suitable adhesive. (79G606, 79G611 or 79G612). The cut should be cleaned and sealed with a neutral silicone kit, contact surfaces may alternatively be modified by glueing machine 559-000 and the associated glue 590-002.

1. Glass specifications:

- Tolerance on thickness

It is very important that the glass thickness does not exceed the 52 mm, to avoid increasing sliding forces.

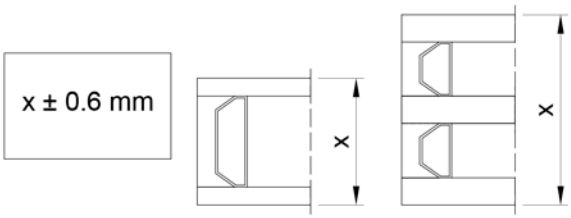

- Difference between glass panes

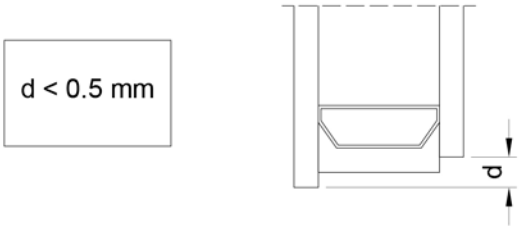

- Tolerances on dimensions of the glass panes

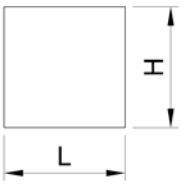

L (MM) H (MM)	TOLERANCE
≤ 2000	± 1
> 2000	± 1.5

- Glass finishing: chamfer lightly

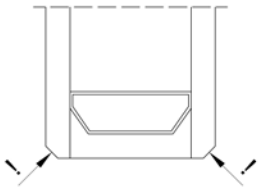

- Clean and degrease glass before assembly and siliconing, respect silicone curing time.
- Cleanup: trim the excess butyl-mastic.
- Measure and retroactively adjust the saw dimensions of the vent, if the glass sizes is outside the specified tolerance.
- If the glass deviates more than 2 mm (on measurement), the frame size should be adjusted.

Hardware & assembly drawings

Assembly guidelines

- Glass tolerance decision table for possibility of pre-fabrication vent and frame profiles.

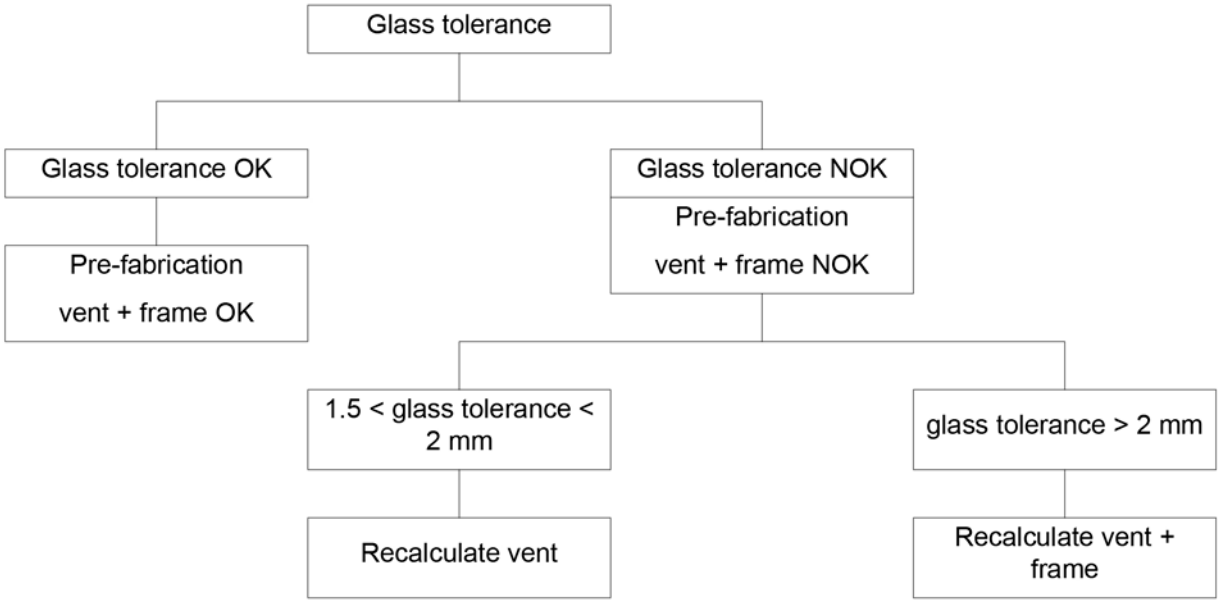

2. Tolerances on sawing dimensons and overall frame sizes.

- Sawing tolerances

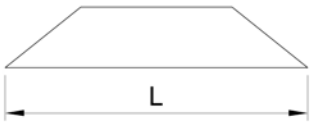

L (MM)	TOLERANCE
≤ 1000	± 0.5
> 1000	± 1

- Frame / vent

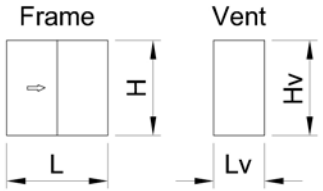

L (MM) H (MM)	TOLERANCE
≤ 2000	± 1
> 2000	± 1.5

- Convexity / concavity of the sash profiles

Remark: add glazing packers 93082-93083 and VS5152-VS5123 to straighten the vent.
(TGD3816)-(TGD3817)

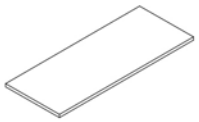

93082(TGD3816)	40x2x100
93083(TGD3817)	40x3x100
VS5152	52x2x100
VS5153	52x3x100

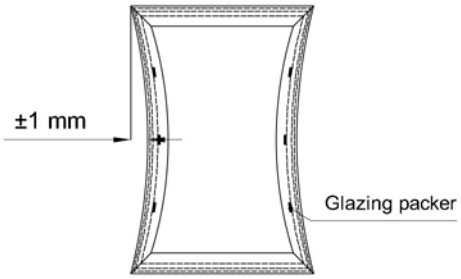

- Overall frame and vent sizes

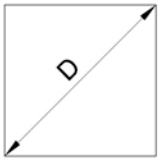

D (MM)	TOLERANCE
≤ 2000	± 0.5
> 2000	± 1

3. Operations on profiles must be implemented accurate through machine center (no pneumatic tools provided).
4. Silicone glue tested by Sapa Building System: 2-component Sikasil SG-500 or 1-component Dow Corning DC776.

Hardware & assembly drawings

Fabrication steps

TECHNAL®

1. Overview vent

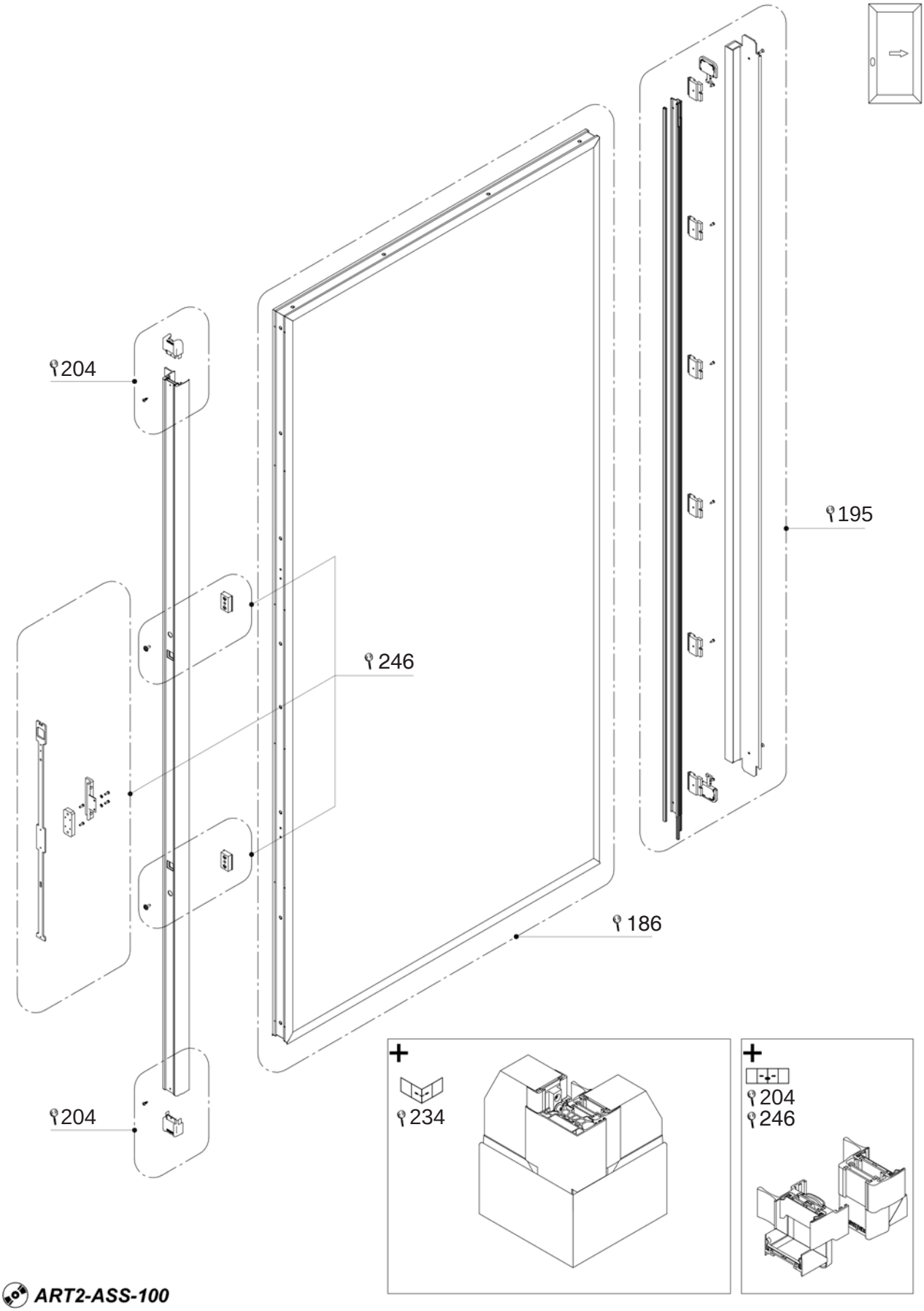

ART2-ASS-100

2. Overview frame

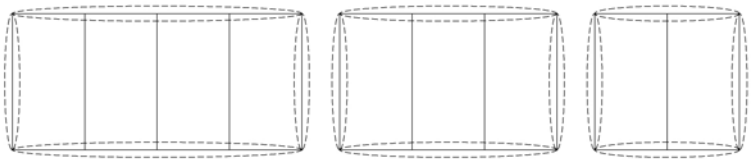

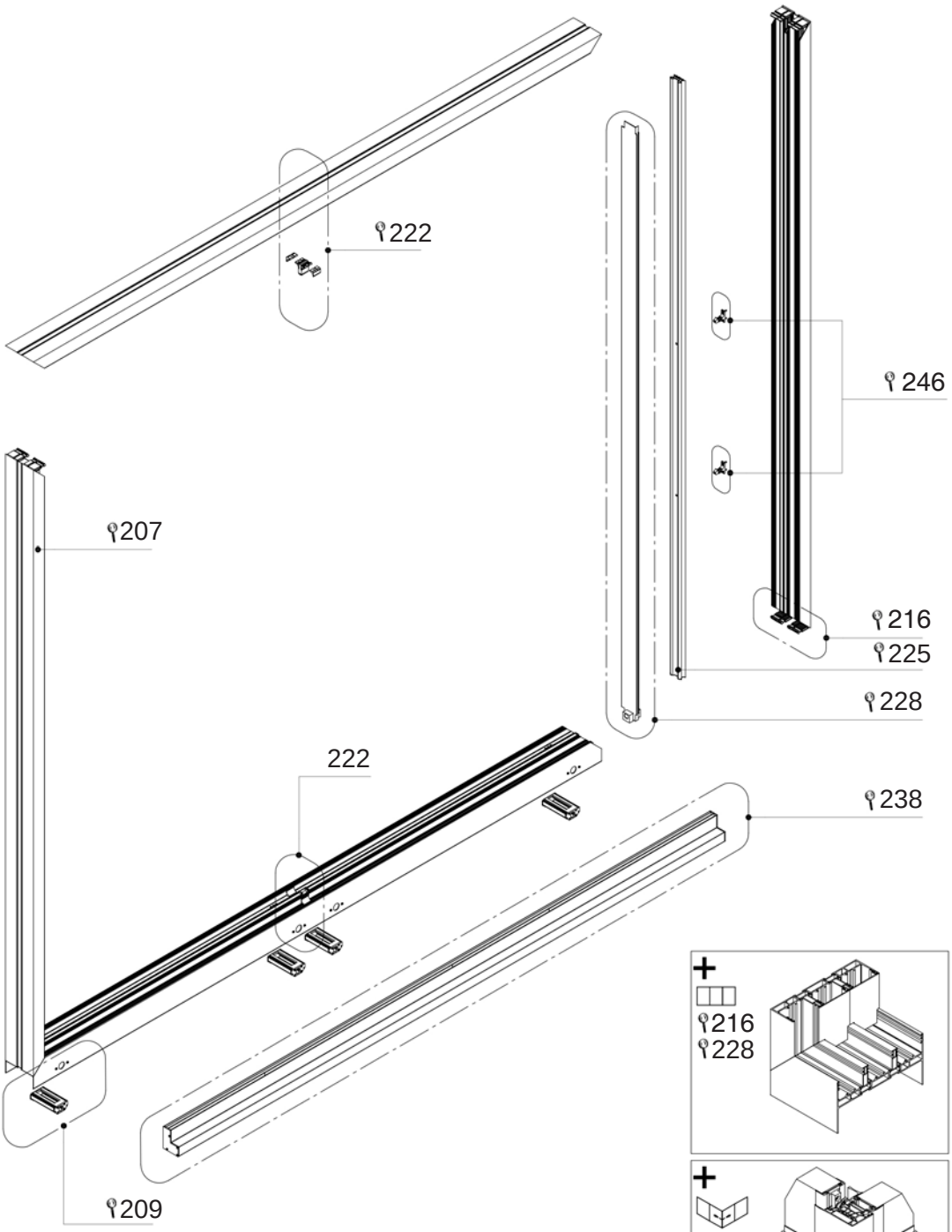

ART2-ASS-101

Hardware & assembly drawings

Fabrication steps

TECHNAL®

3. Overview mounting vent - Step 1

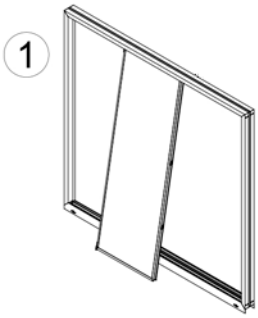

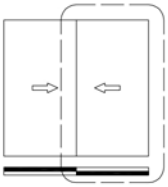

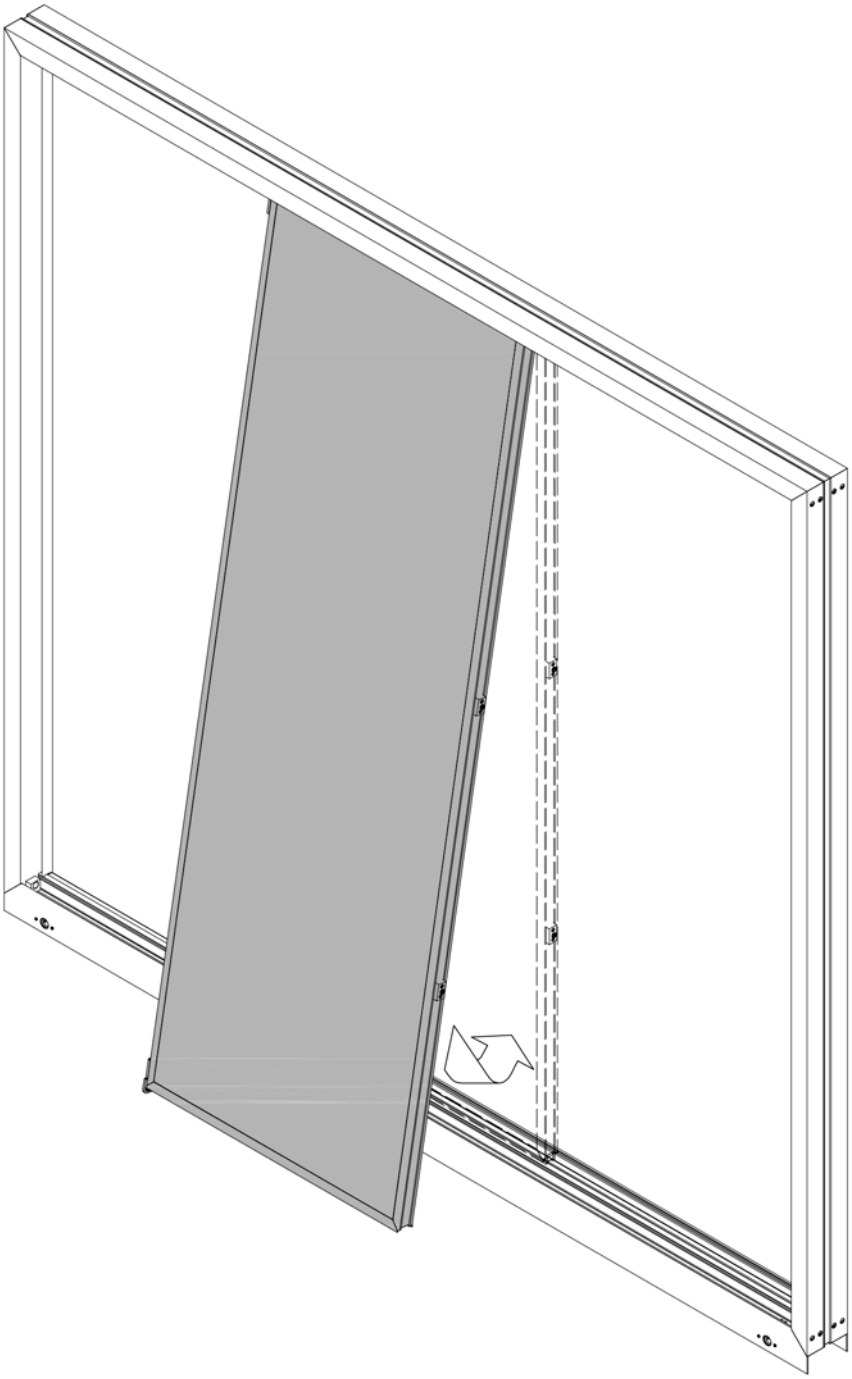

ART2-ASS-102

3. Overview mounting vent - Step 2

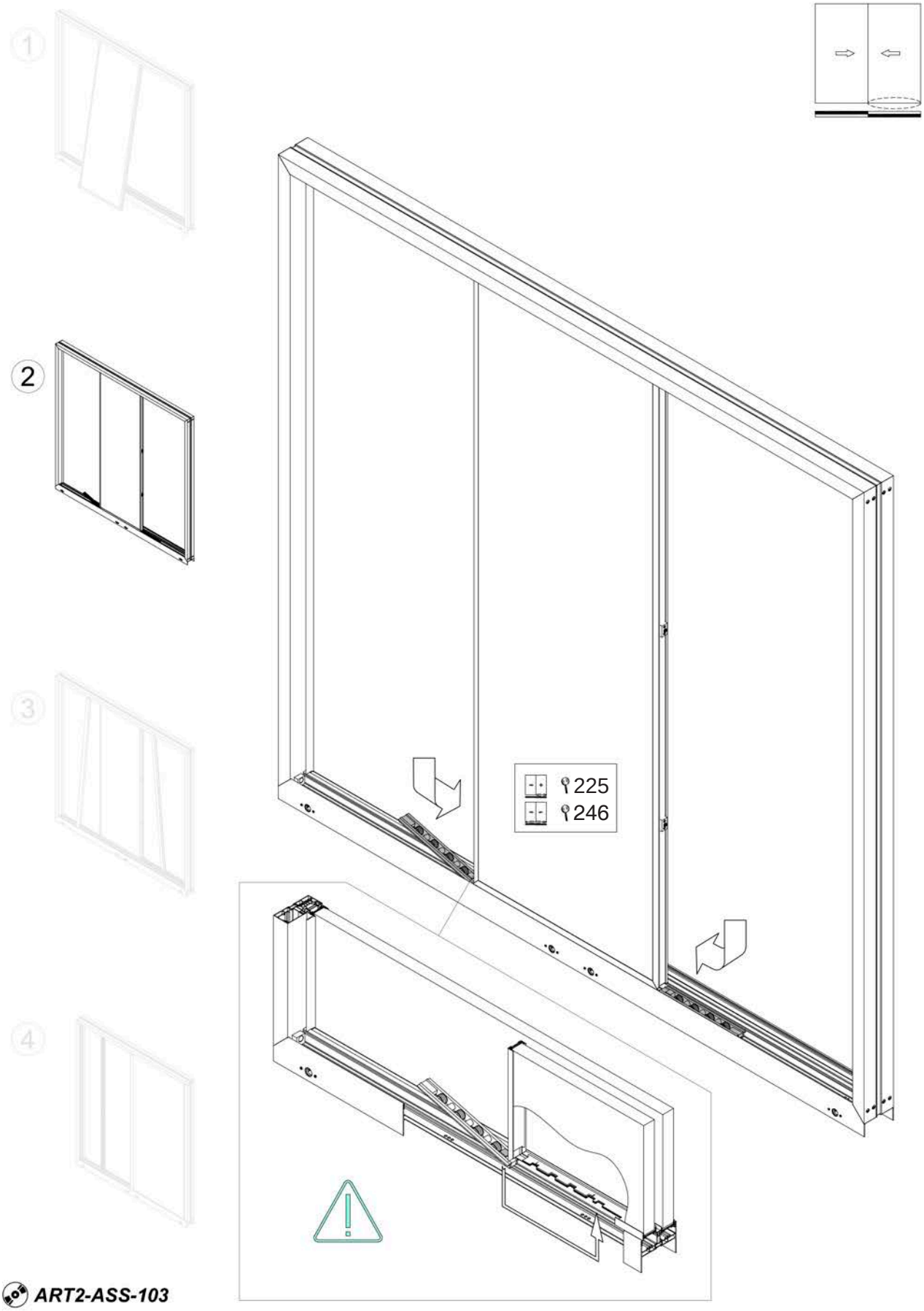

ART2-ASS-103

Hardware & assembly drawings

Fabrication steps

TECHNAL®

3. Overview mounting vent - Step 3

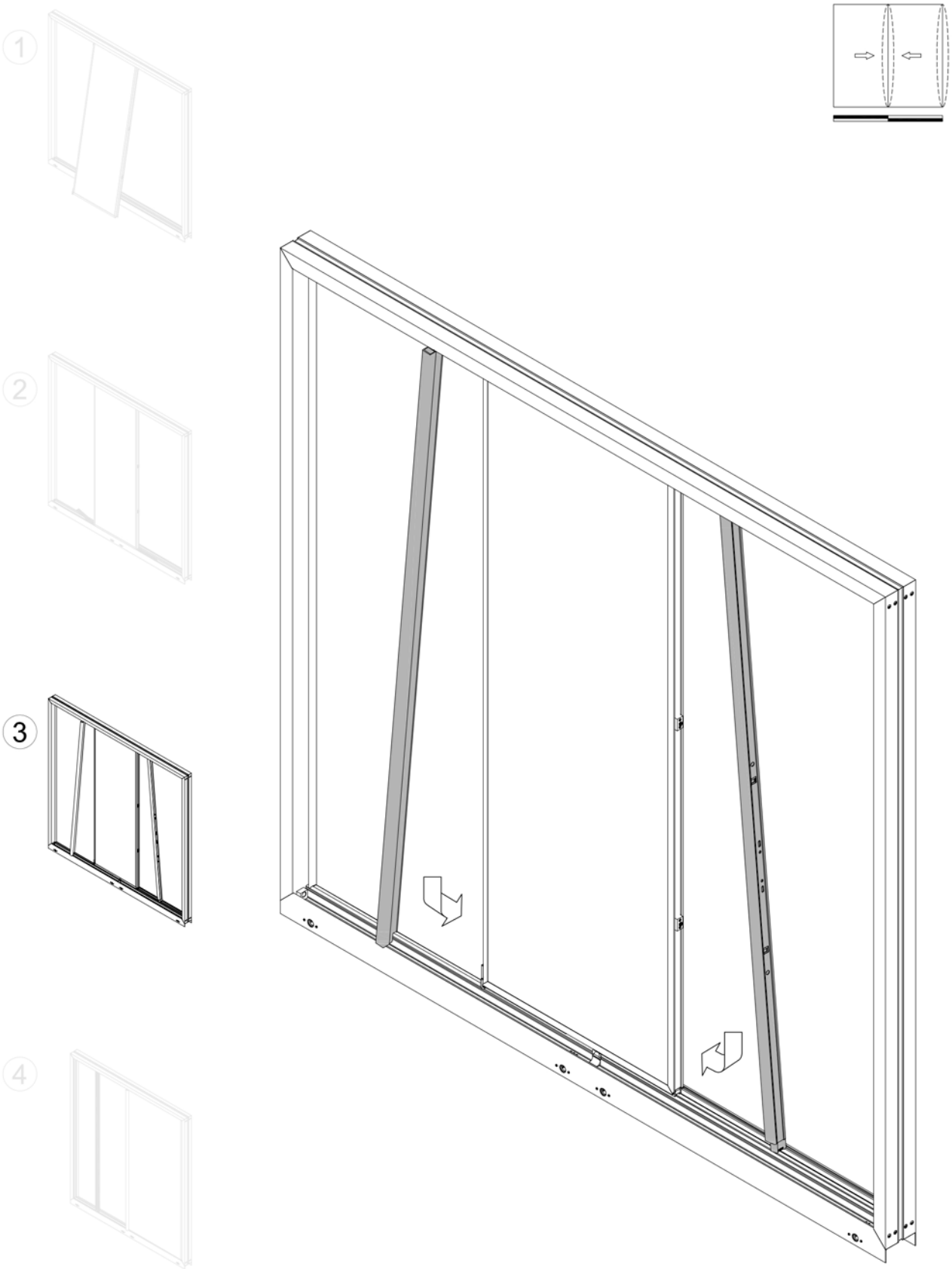

ART2-ASS-104

3. Overview mounting vent - Step 4

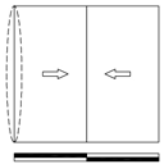

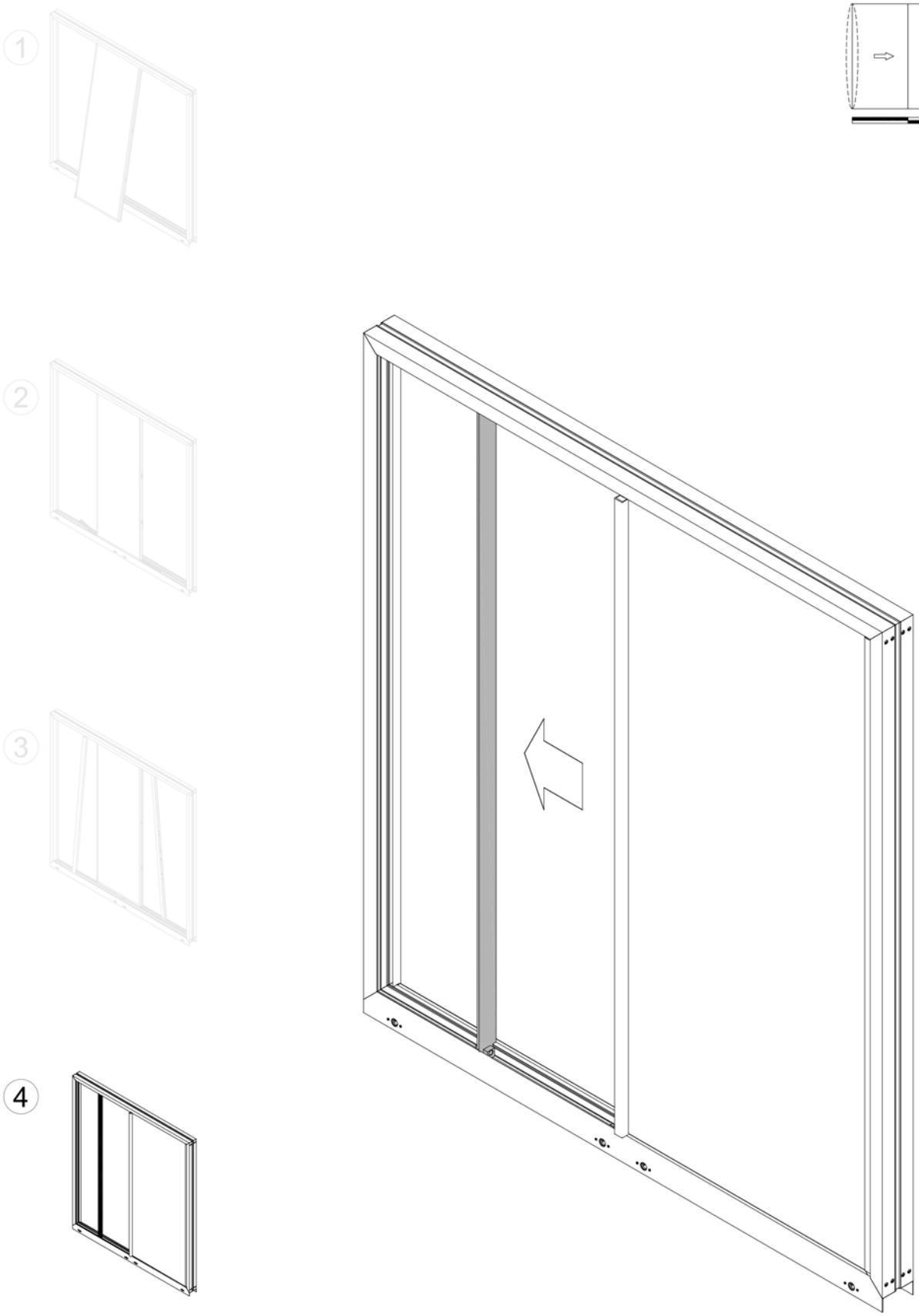

ART2-ASS-105

Hardware & assembly drawings

Assembly of vent

POSSIBLE VENT COMBINATIONS

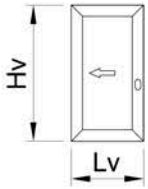

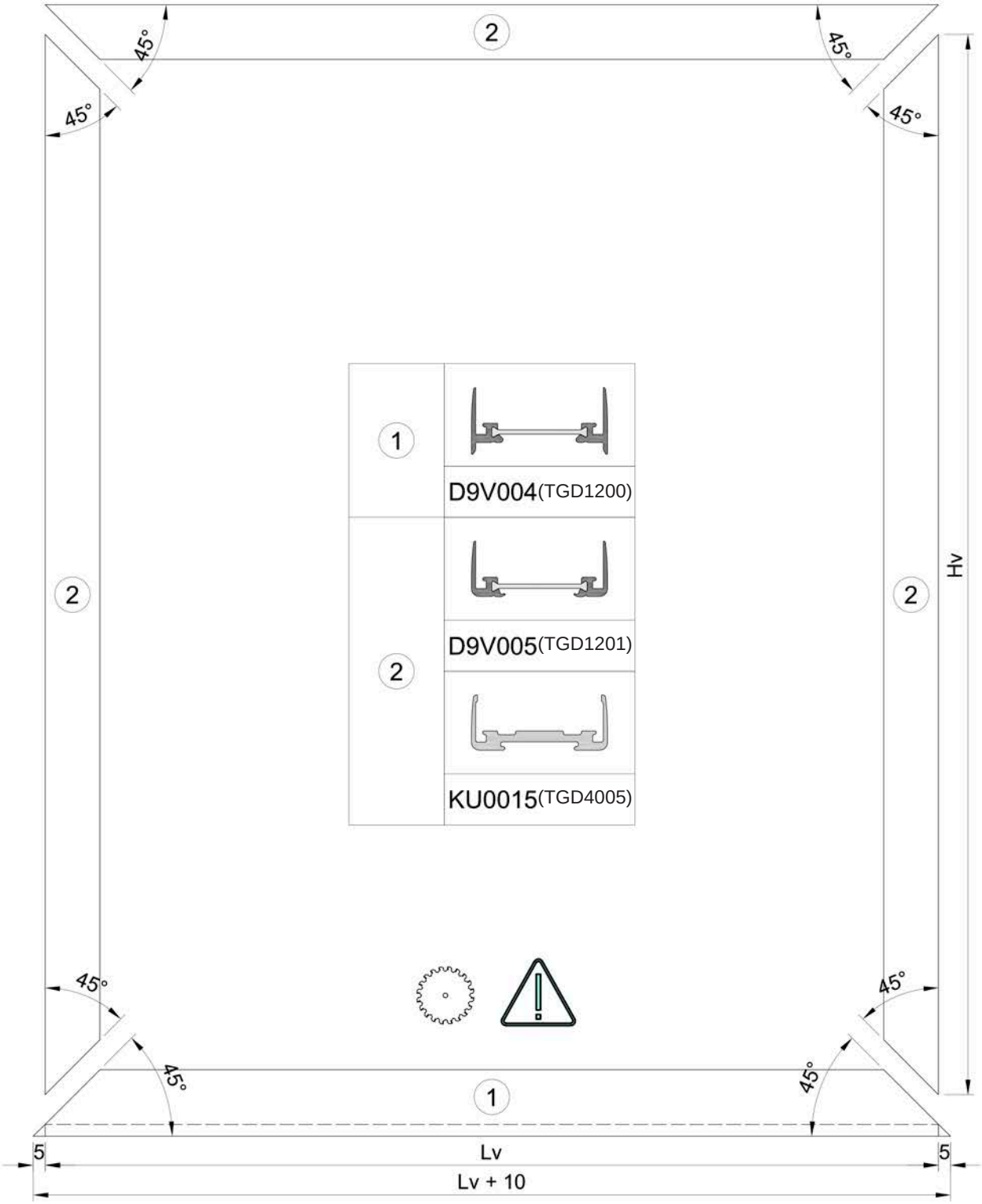

1	D9V004(TGD1200)
2	D9V005(TGD1201)
	KU0015(TGD4005)

ART2-ASS-200

COMBINATION D9V004 AND KU0015

(TGD1200) (TGD4005)

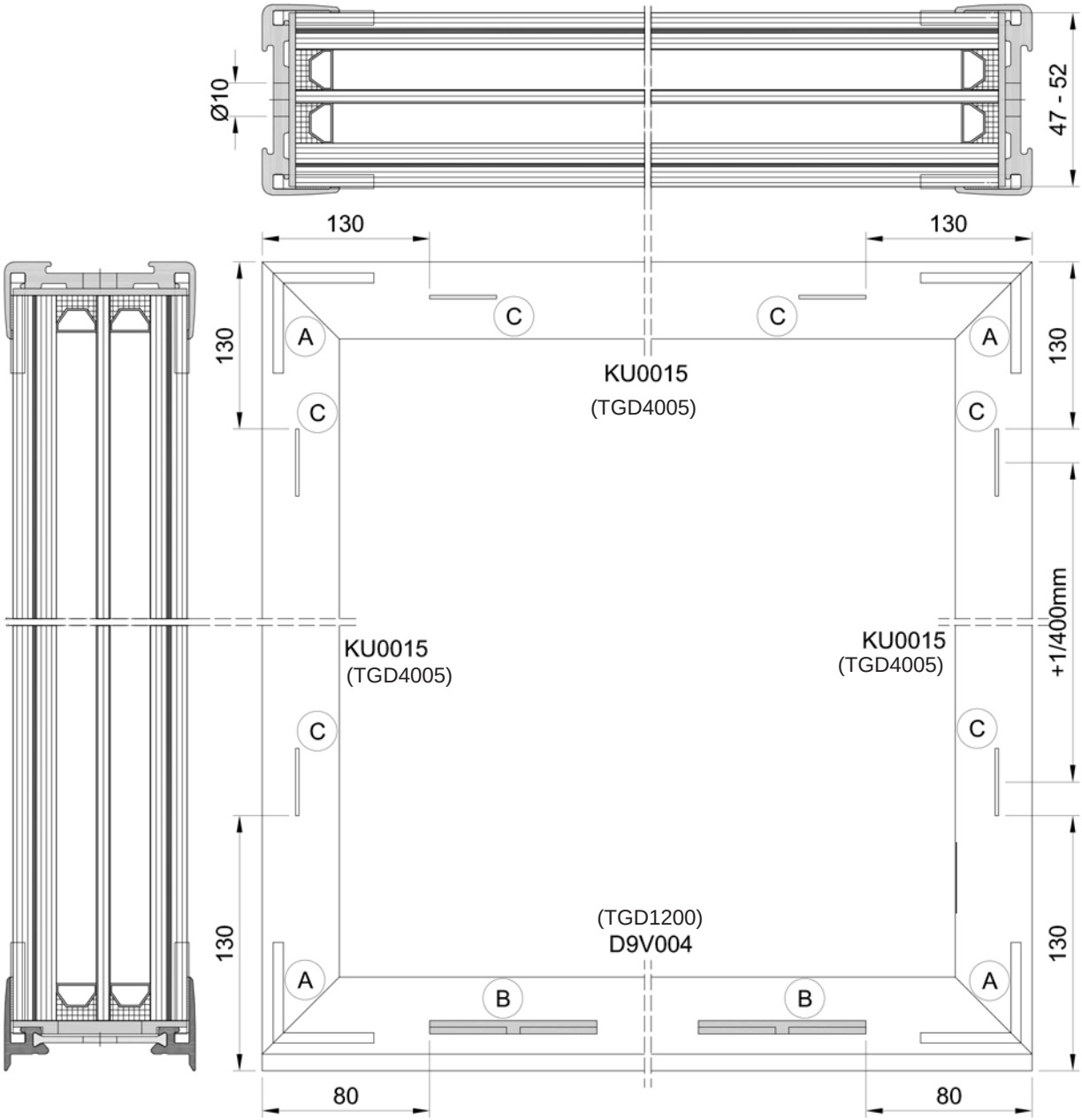

KU0015 (TGD4005)

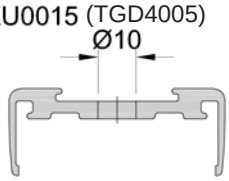

D9V004 (TGD1200)

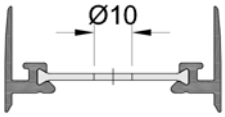

A	8x		HV4K05 (TGD3606)
B	2x		CO0208 (TGD3800)
C	1/400mm		VS5152

ART2-ASS-206

Hardware & assembly drawings

Assembly of vent

TECHNAL®

COMBINATION: D9V004 + D9V005 + CO0237
(TGD1200 + TGD1201 + TGD4006)

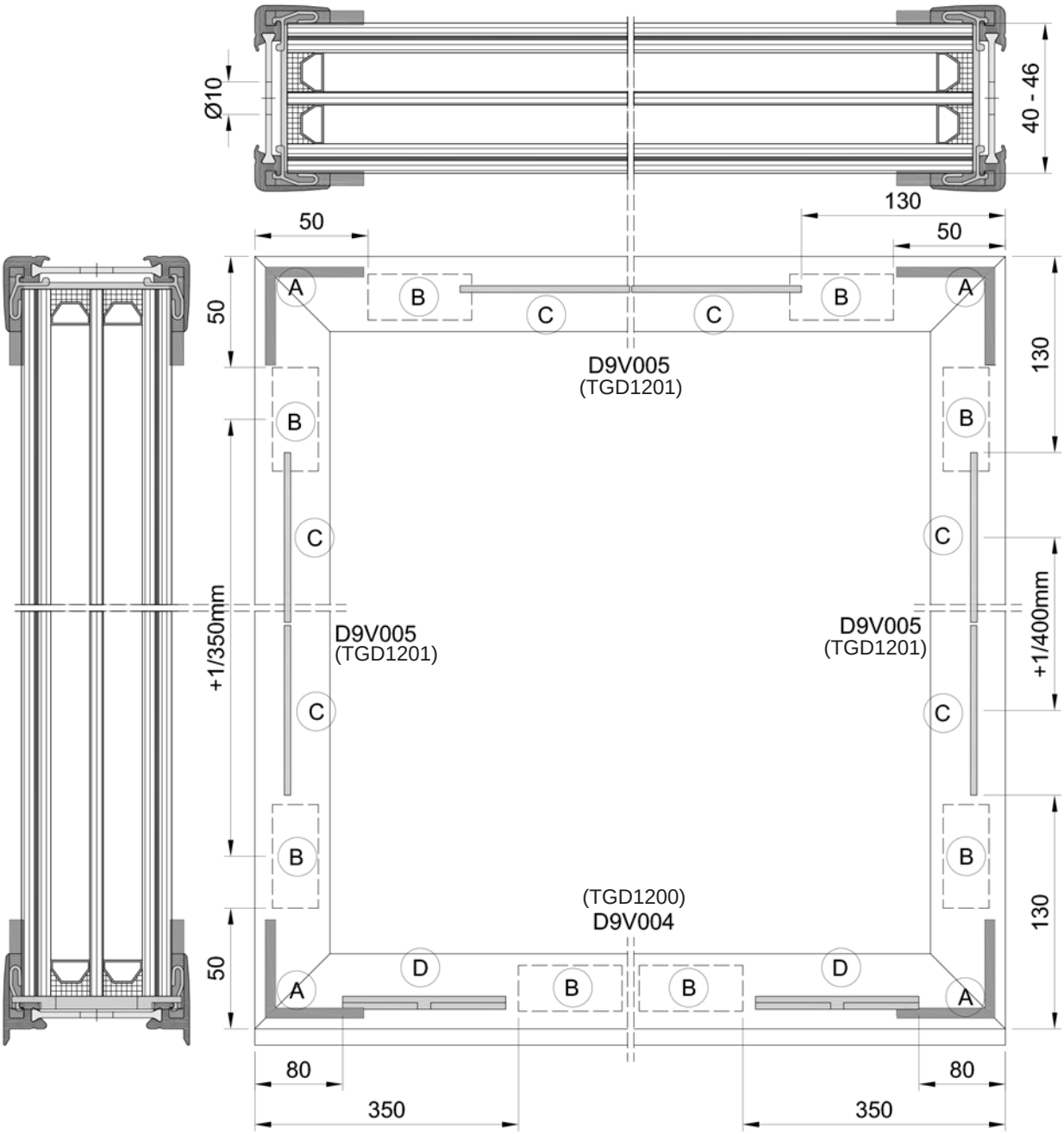

D9V005 (TGD1201)

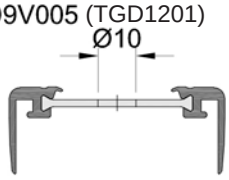

D9V004 (TGD1200)

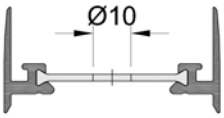

A	8x		HV4K05 (TGD3606)
B	1/350mm		CO0237 (TGD4006)
C	1/400mm		VS5152
D	2x	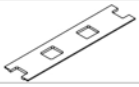	CO0208 (TGD3800)

ART2-ASS-201

COMBINATION: D9V004 + D9V005
(TGD1200 + TGD1201)

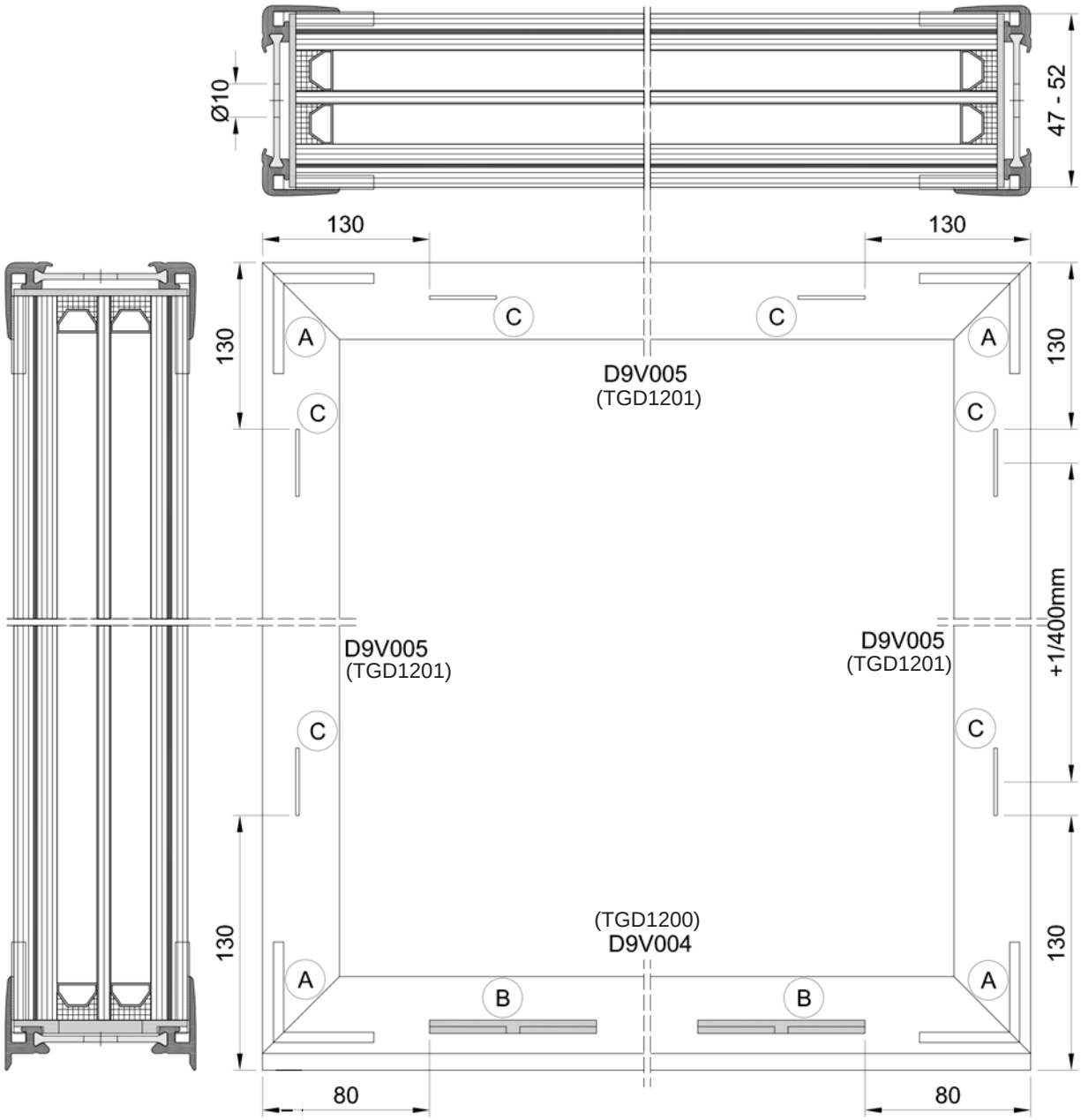

D9V005 (TGD1201)

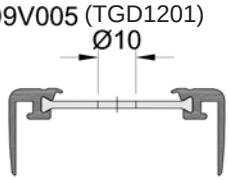

D9V004 (TGD1200)

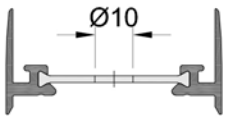

A	8x		HV4K05 (TGD3606)
B	2x		CO0208 (TGD3800)
C	1/350mm		VS5152

ART2-ASS-202

Hardware & assembly drawings

Assembly of vent

TECHNAL®

VENTILATION OPENINGS IN VENT

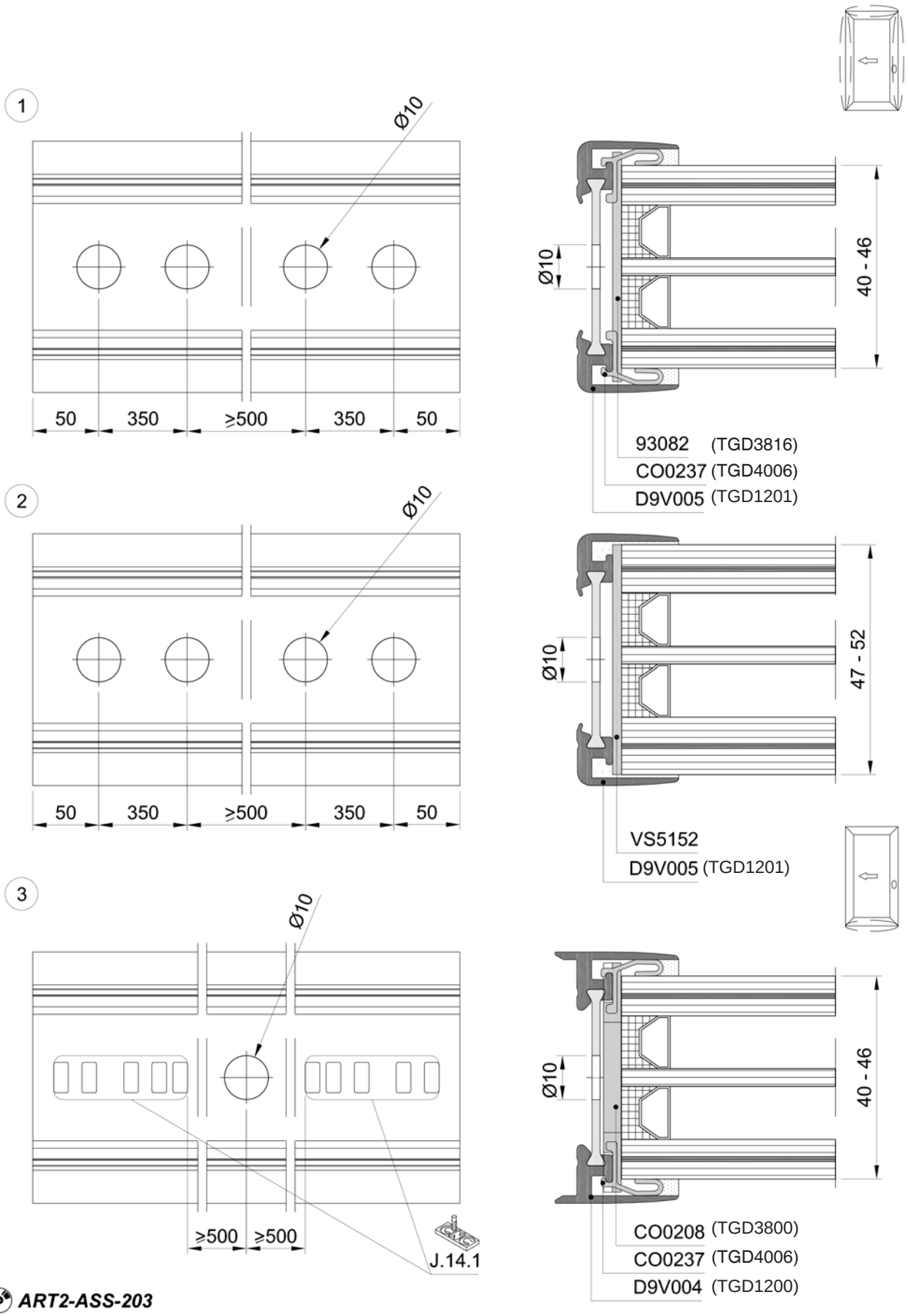

ART2-ASS-203

GLAS ASSEMBLY

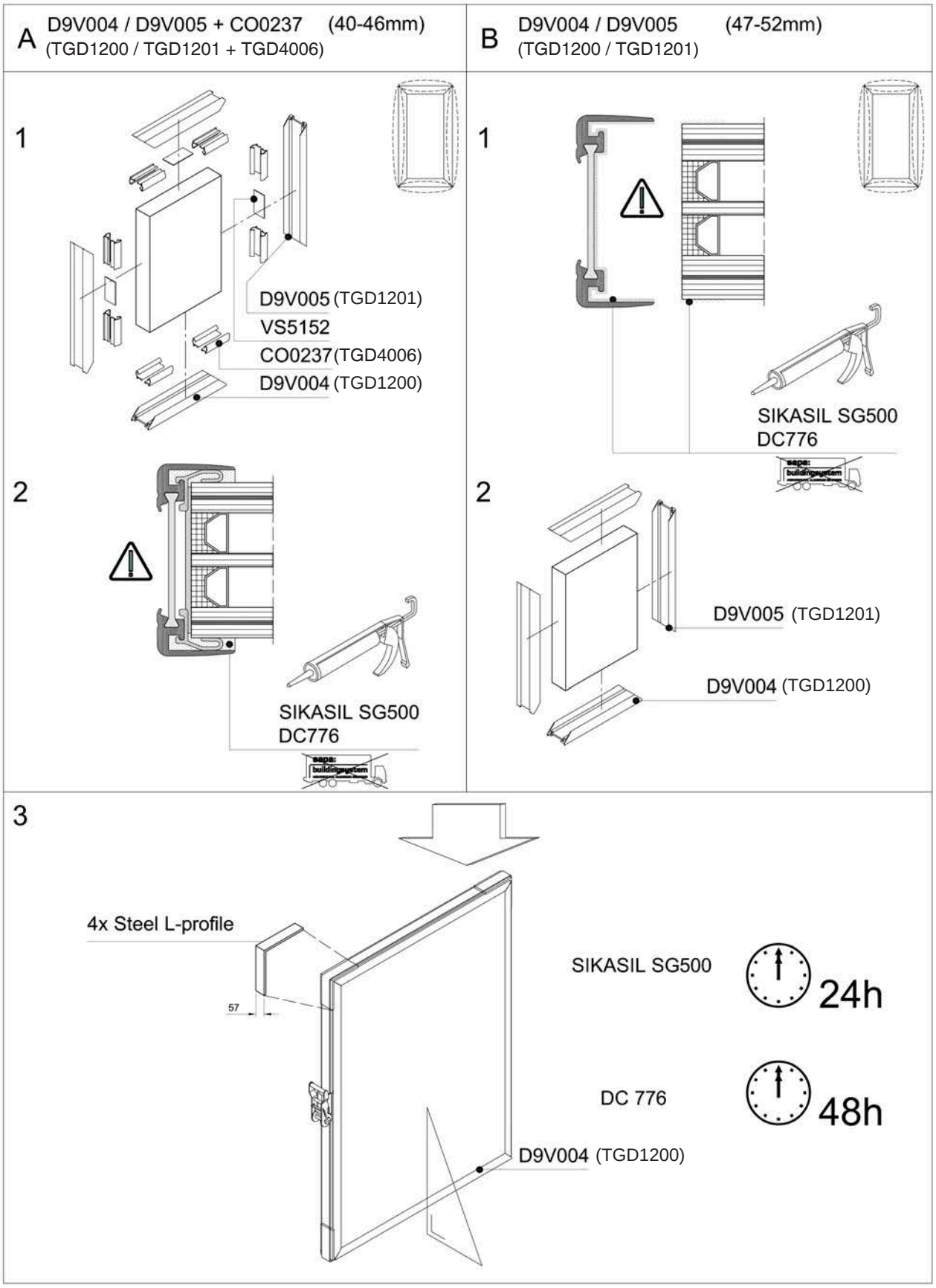

(TGD4006)

A1: Install CO0237 in profiles, place silicone, assemble the profiles around the glass. / A2: Seal with silicone. / B1: Place silicone in the profile. / B2: Assemble the profiles around the glass. / Use belts to press profiles to glass when glue drying. / Cut out for rollers should be kept free of silicone.

Hardware & assembly drawings

Assembly of vent

TECHNAL®

ASSEMBLY CO0237 (TGD4006)

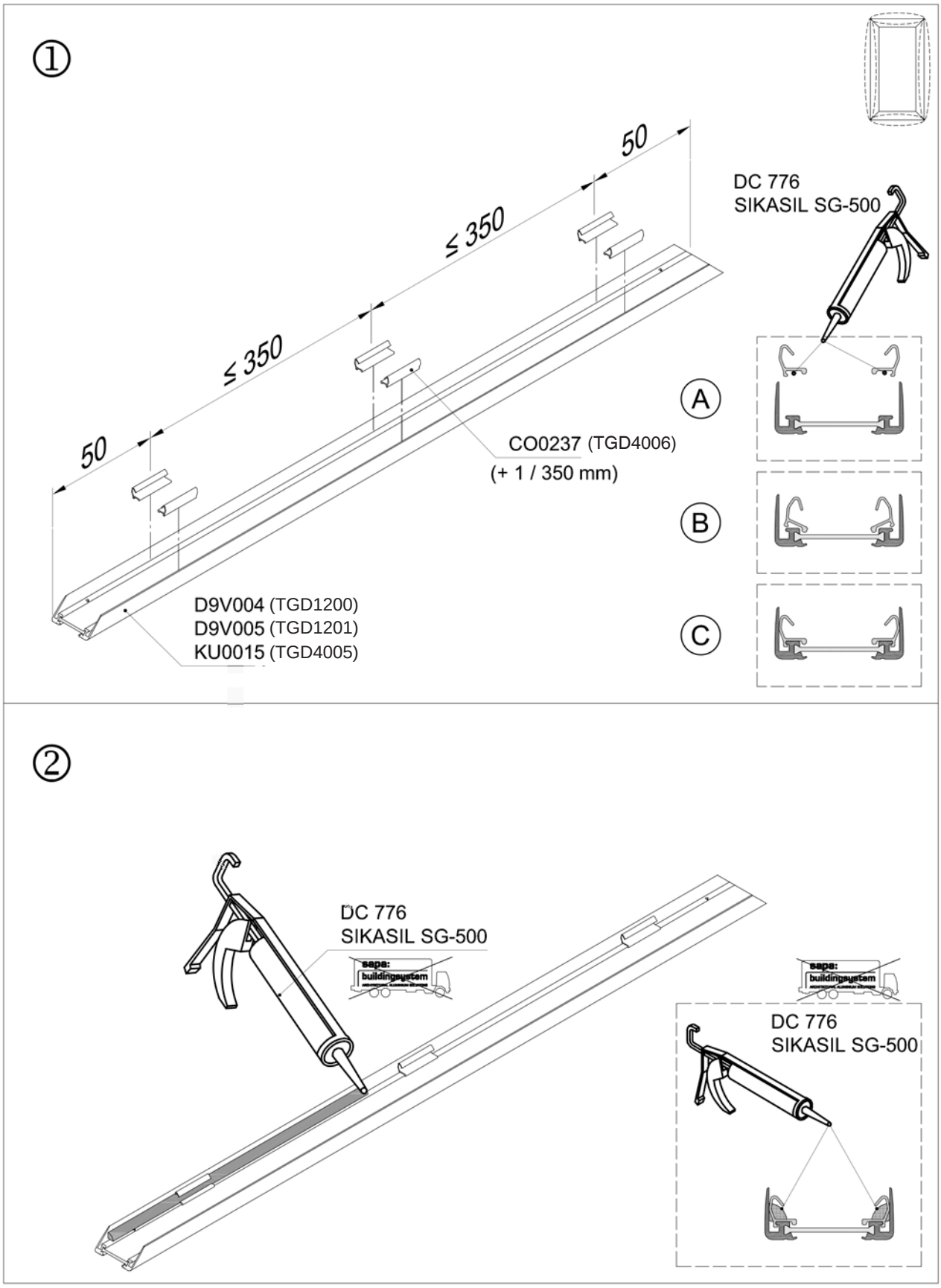

ART2-ASS-902

1. Install CO0237(TGD4006)in the profiles.
2. Place silicone in the profiles.

GLASS ASSEMBLY WITH CO0237

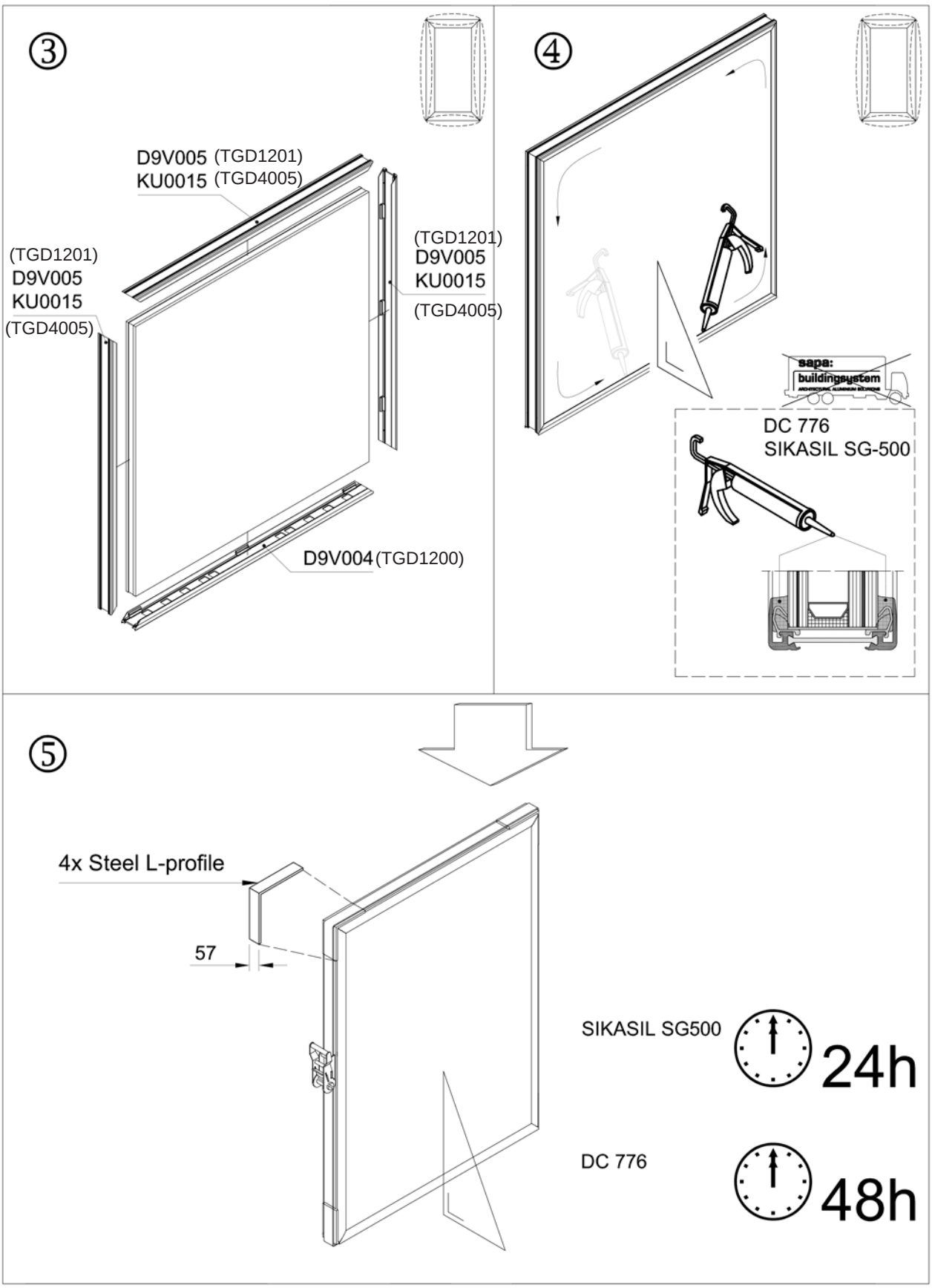

3. Assemble the profiles on interlocking glass edge.
4. Fill the gap between glass and profiles in a vertical position.
5. Use belts to press profiles to glass when glue is drying. Cut out for rollers should be kept free of silicone.

Hardware & assembly drawings

Assembly of vent

TECHNAL®

GLASS ASSEMBLY - FIX GLAZING WITH NO VENT FRAME

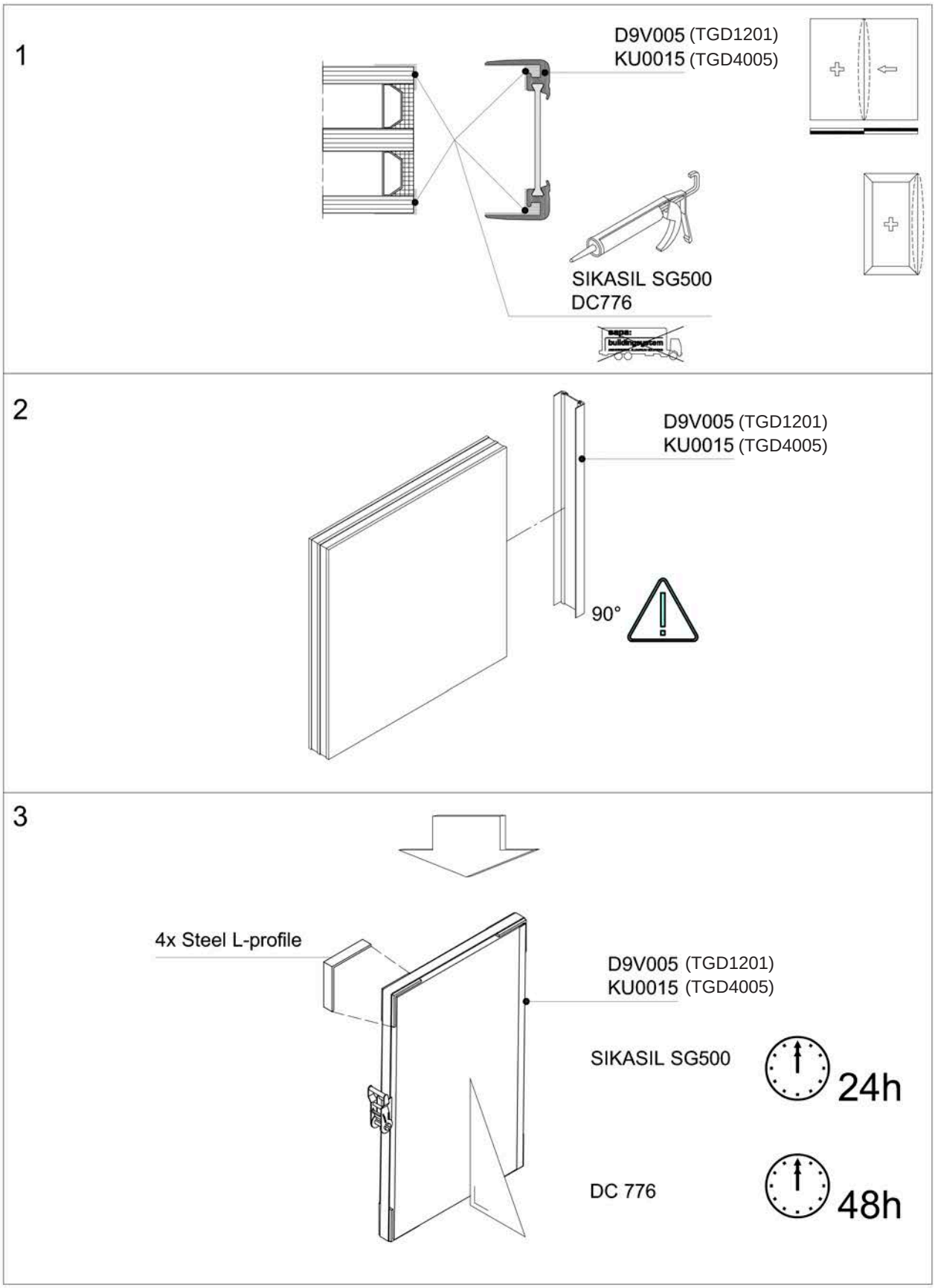

ART2-ASS-205

1. Place silicone in the profile.
2. Assemble the profiles on interlocking glass edge. 3. Use belts to press profiles to glass when glue is drying.

KU0012: OPERATIONS ON D9V005 AND KU0012
(TGD4004) (TGD1201) (TGD4004)

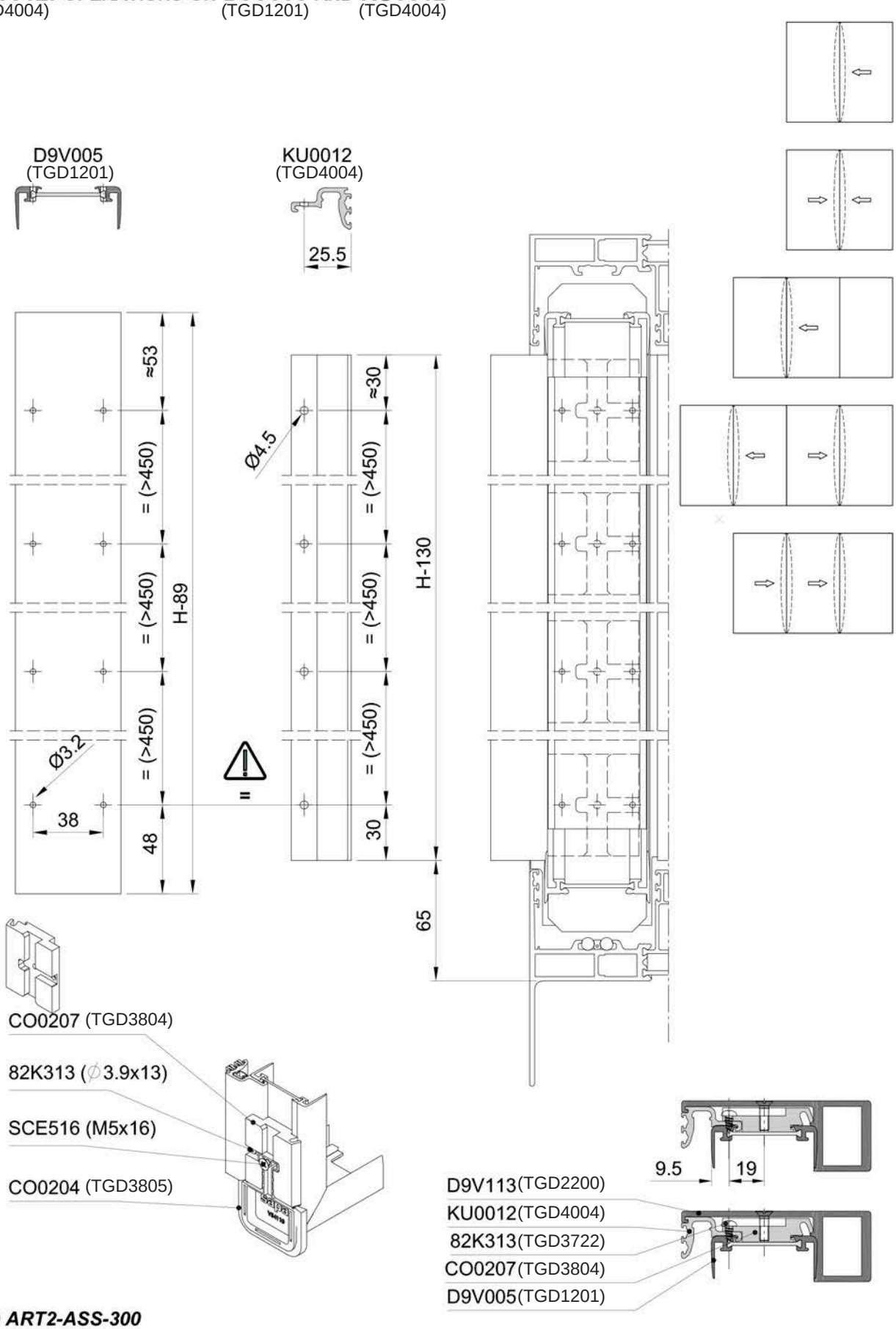

ART2-ASS-300

Hardware & assembly drawings

Assembly interlock

OPERATIONS ON COVER PROFILES D9V1XX

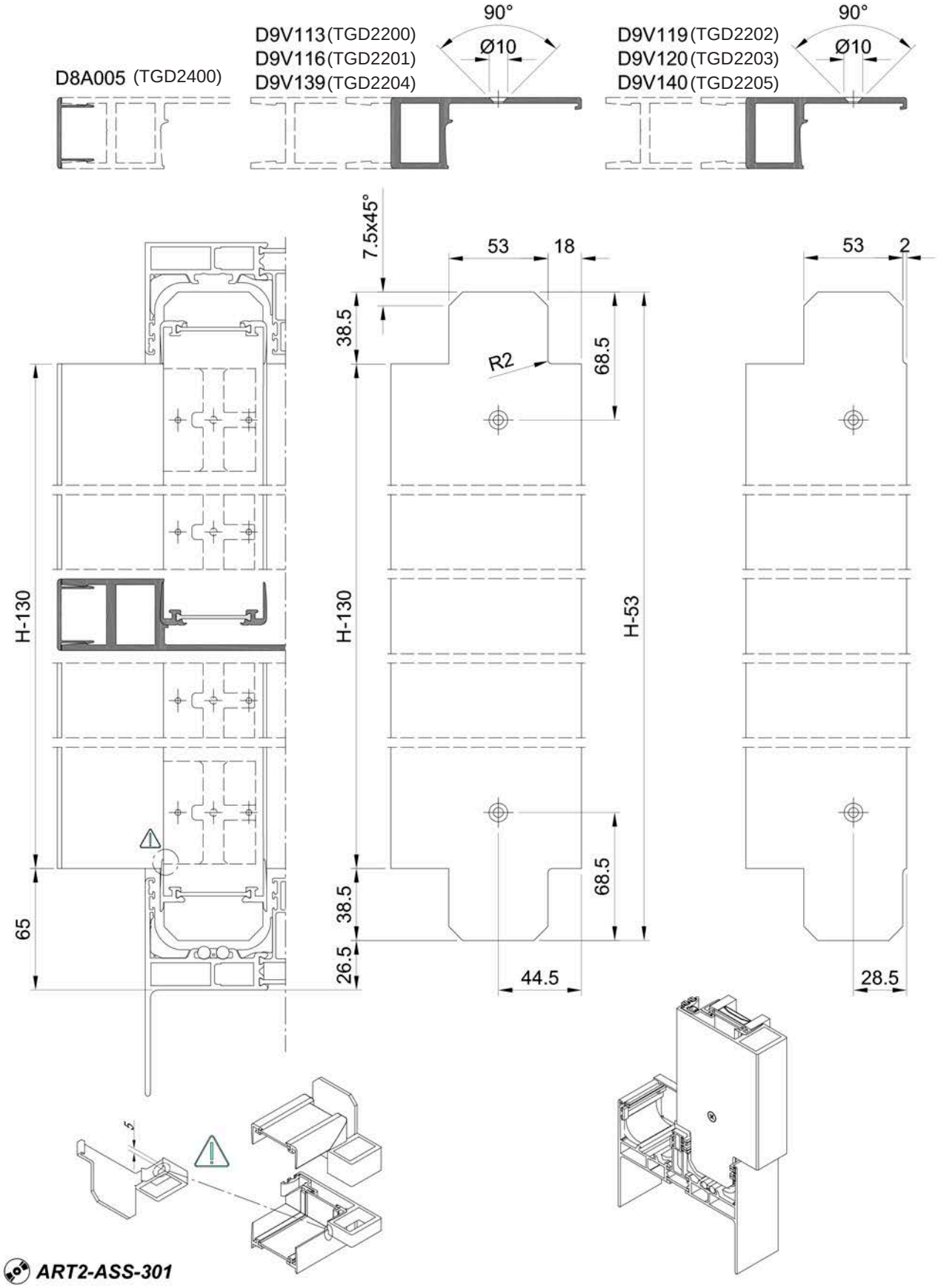

KU0013: OPERATIONS ON D9V005 AND KU0013
(TGD4001) (TGD1201) (TGD4001)

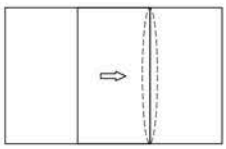

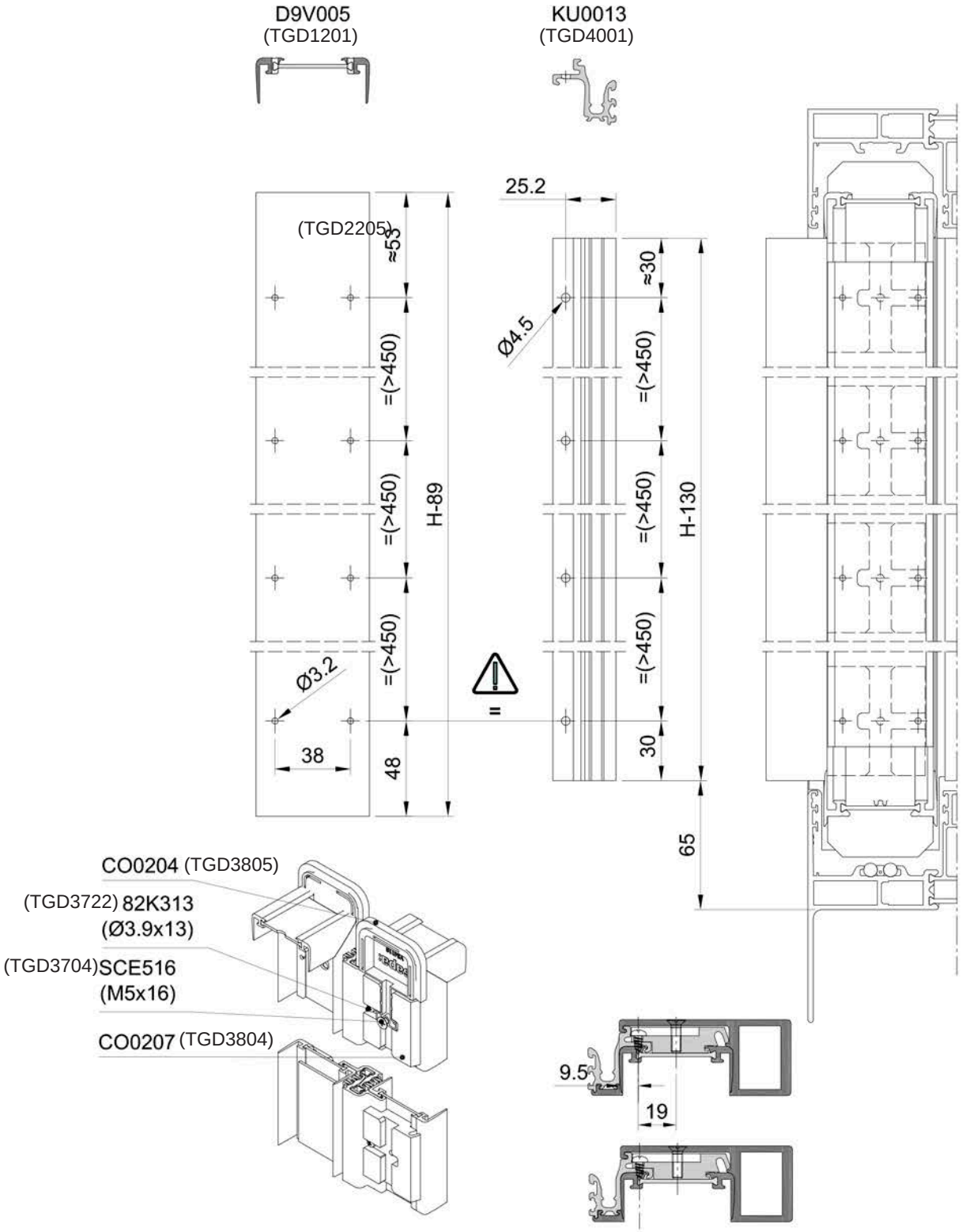

ART2-ASS-302

Hardware & assembly drawings

Assembly interlock

KU0004: OPERATIONS ON KU0015
(TGD4002) (TGD4005)

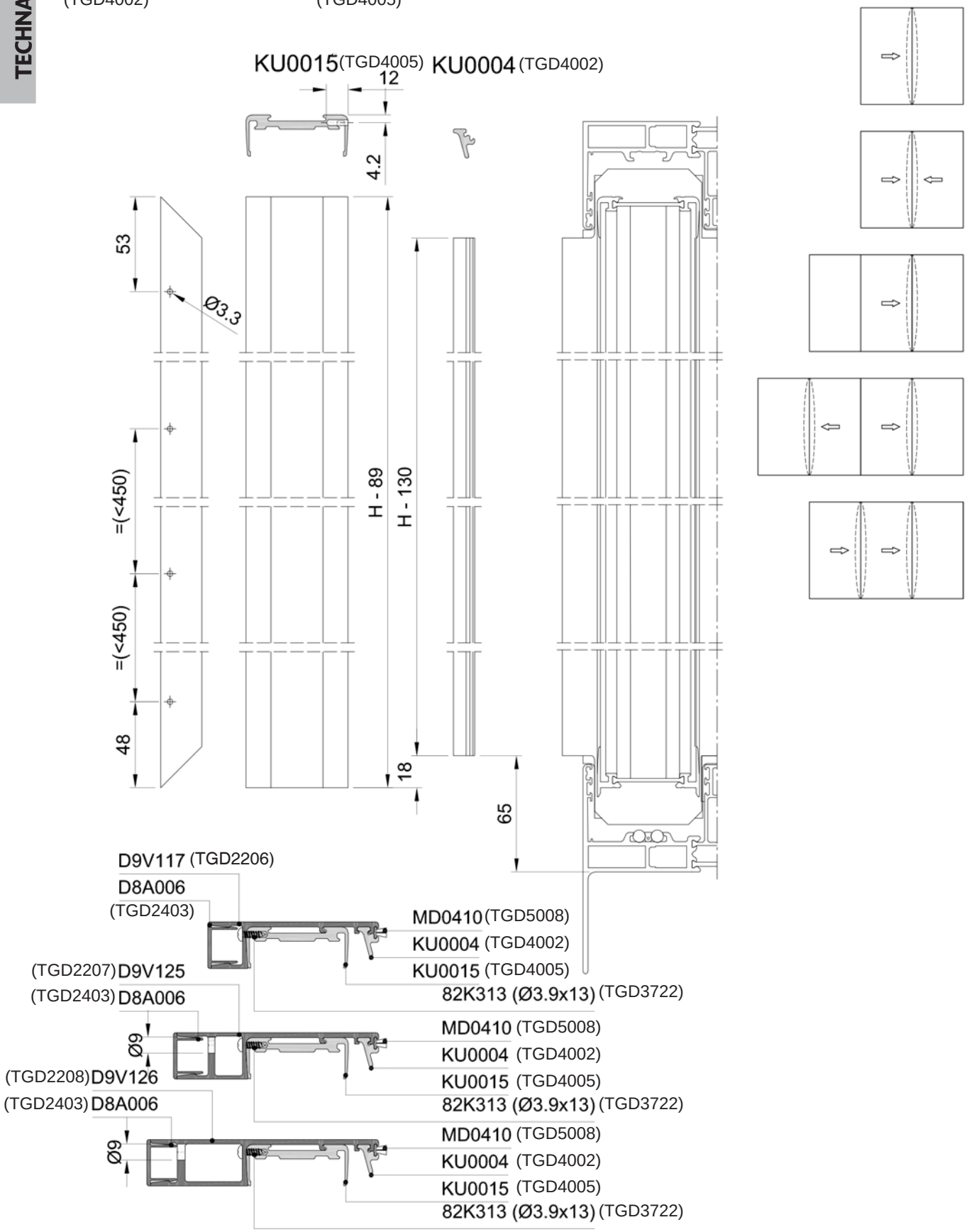

ART2-ASS-304

OPERATIONS ON COVER PROFILES D9V117 (TGD2206)

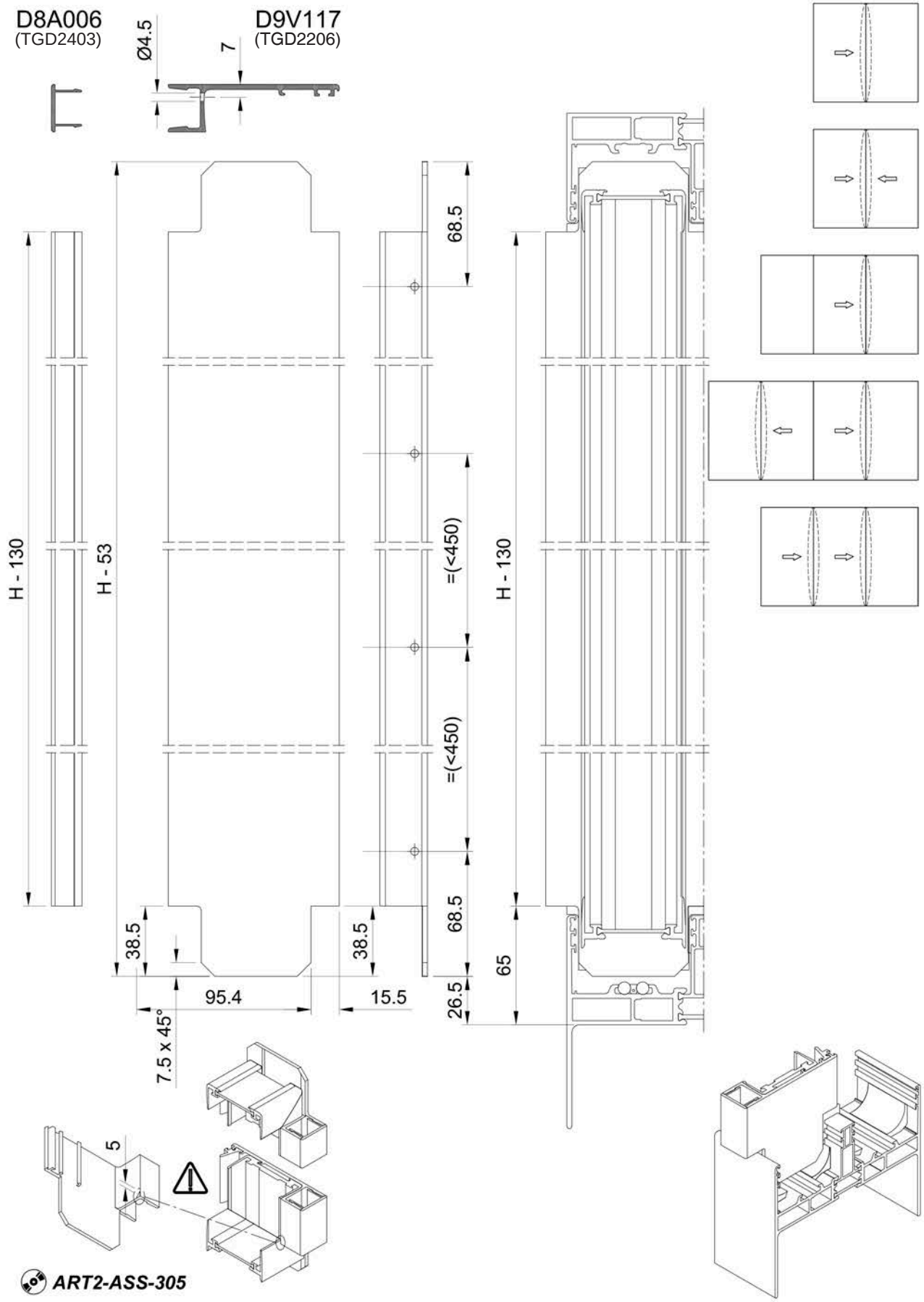

Hardware & assembly drawings

Assembly interlock

TECHNAL®

OPERATIONS ON COVER PROFILES D9V125/D9V126 (TGD2207 / TGD2208)

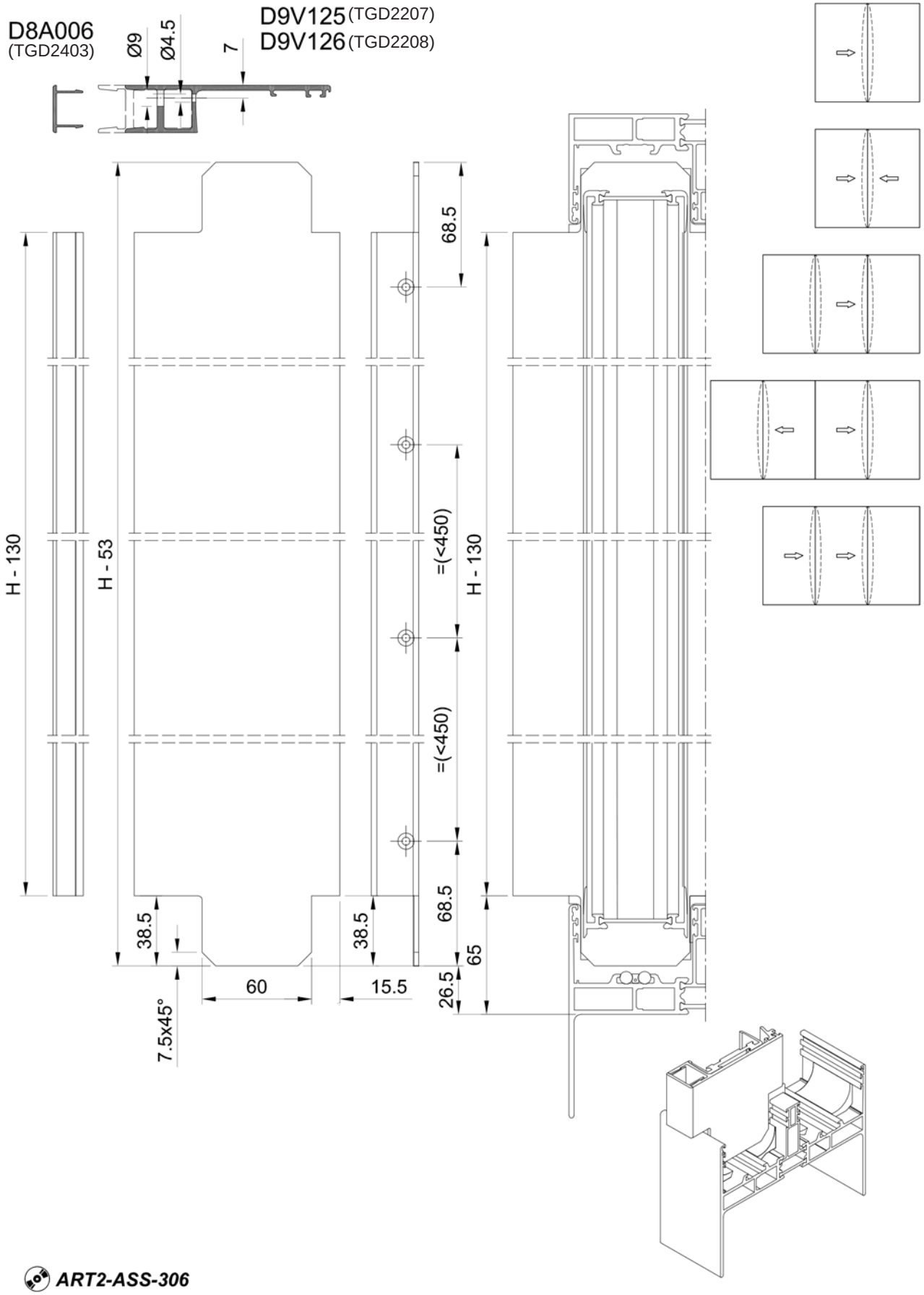

ART2-ASS-306

KU0012: OPERATIONS ON D9V005 AND KU0012 (FIX GLAZING WITH NO FRAME)

(TGD4004) (TGD1201) (TGD4004)

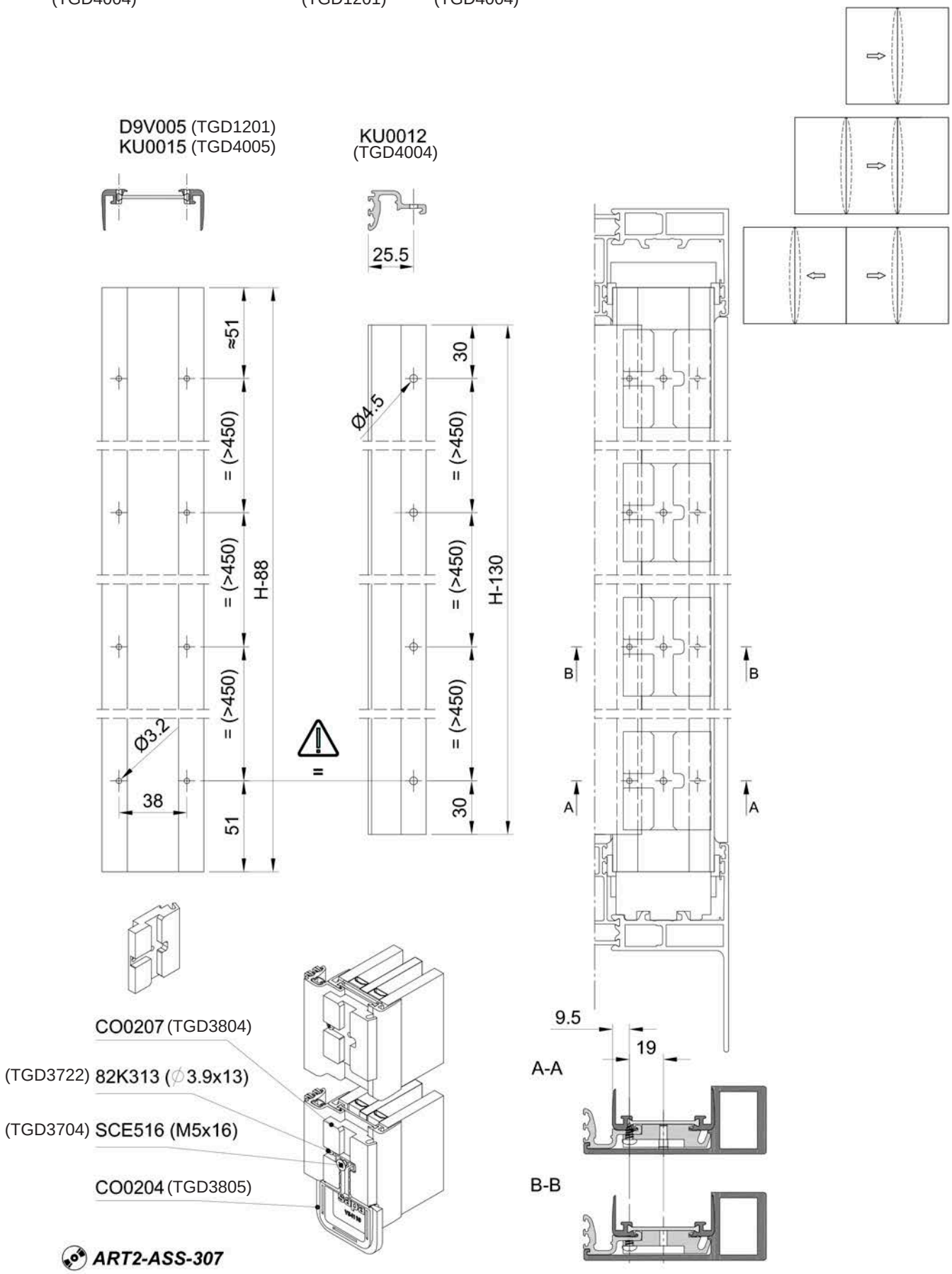

Hardware & assembly drawings

Assembly interlock

TECHNAL®

KU0013: OPERATIONS ON D9V005 AND KU0013 (FIX GLAZING WITH NO FRAME)

(TGD4001) (TGD1201) (TGD4001)

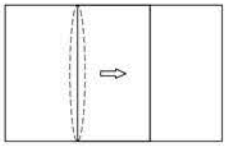

D9V005 (TGD1201)
KU0015 (TGD4005)

KU0013 (TGD4001)

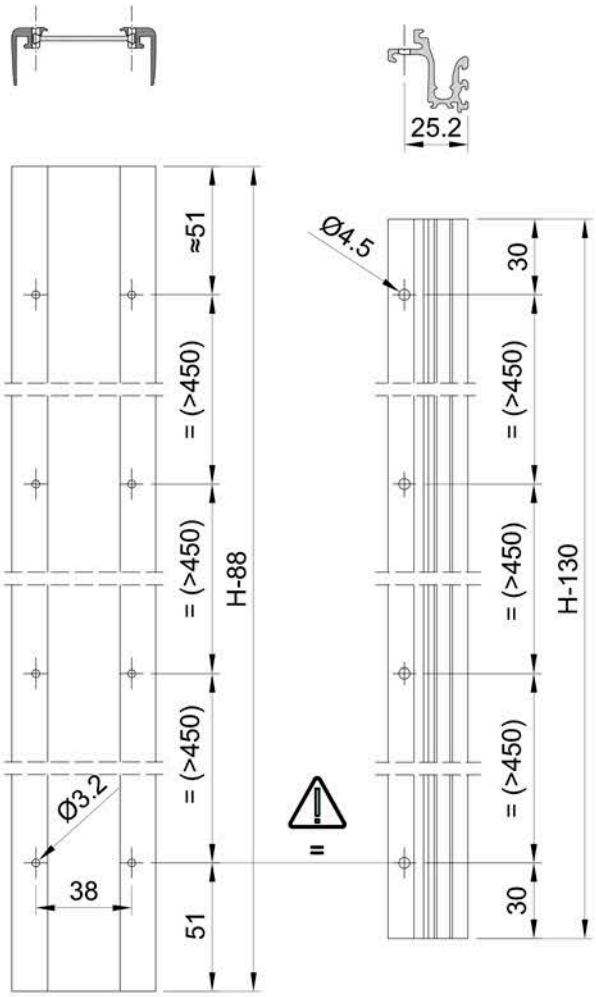

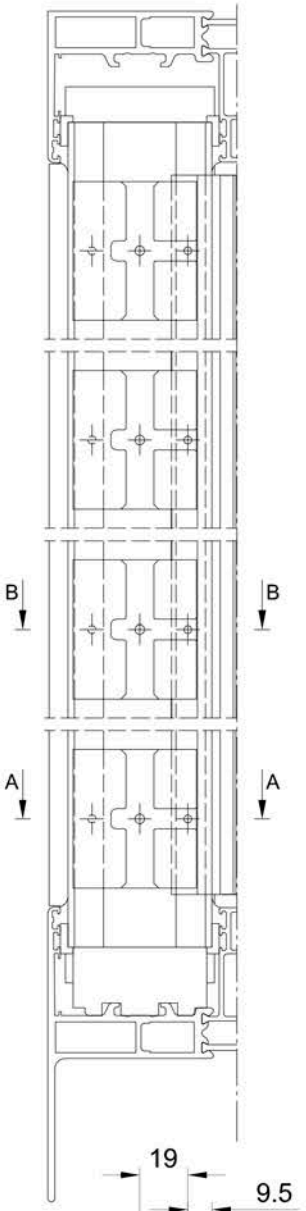

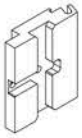

CO0204 (TGD3805)
SCE516 (TGD3704)
(M5x16)
82K313 (TGD3722)
(Ø3.9x13)
CO0207 (TGD3804)

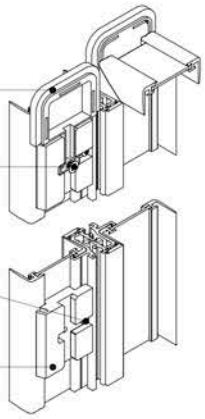

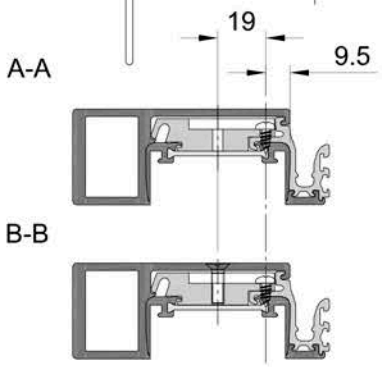

ART2-ASS-308

USE OF CO0203, CO0220 (TGD3608, TGD3609)

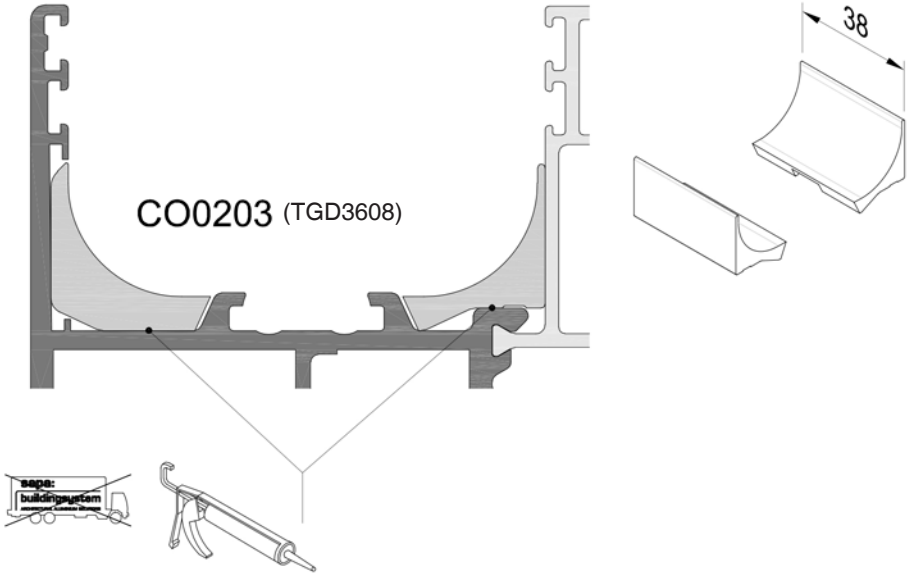

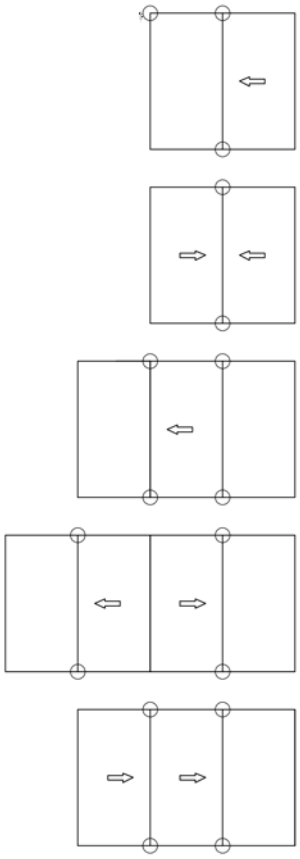

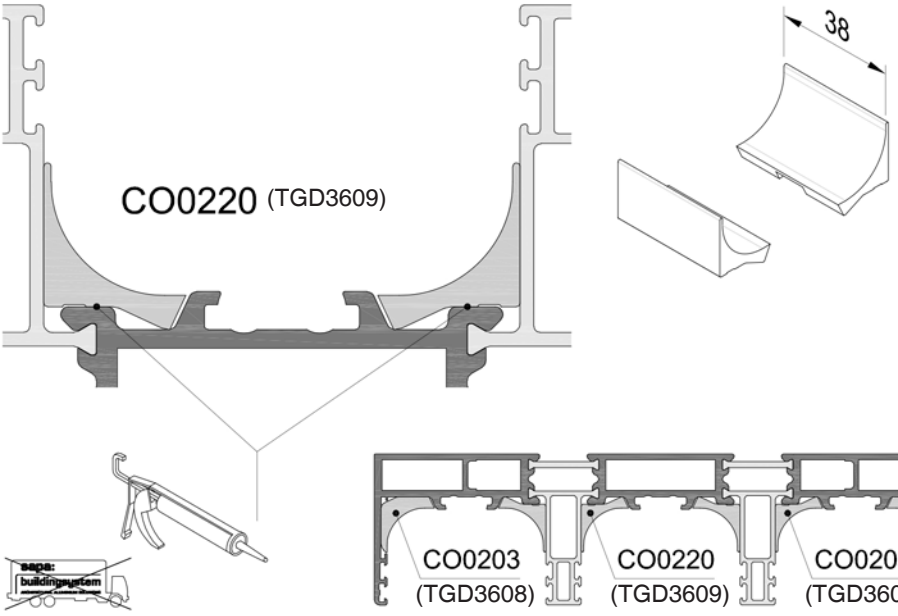

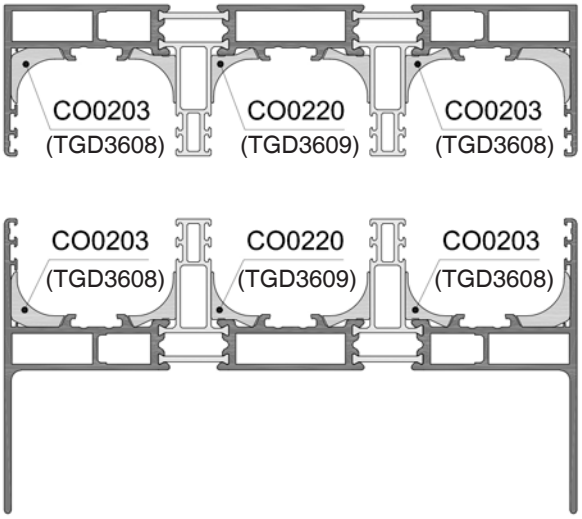

ART2-ASS-303

Hardware & assembly drawings

Assembly end pieces lock profile

TECHNAL®

OPERATIONS ON D9V007 / D9V008 WITH CO0210 (TGD3806)

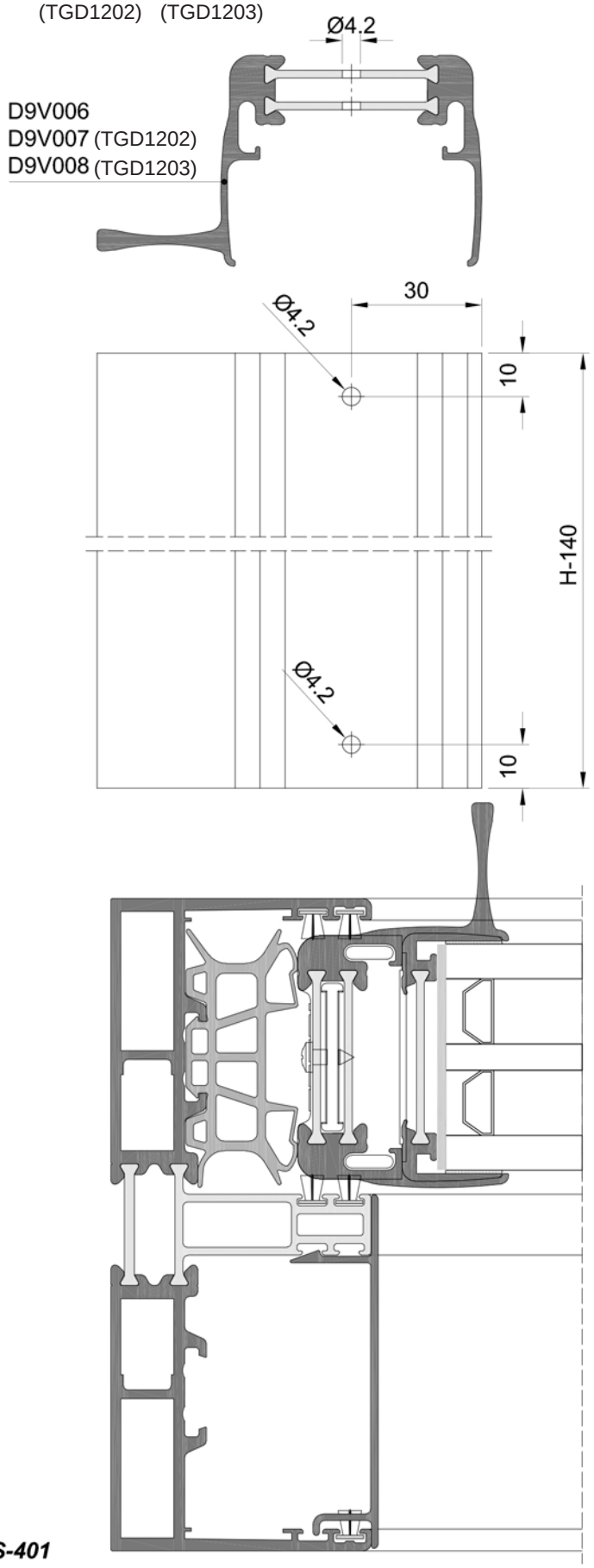

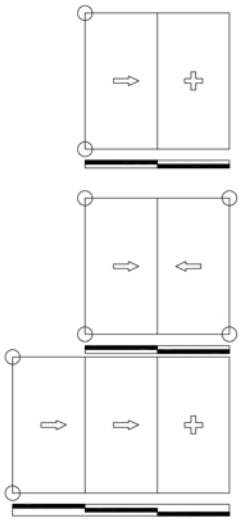

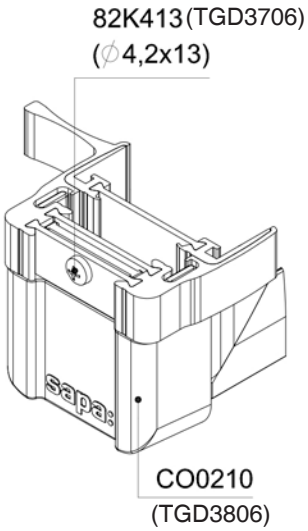

ART2-ASS-401

D9V007 / D9V008 / D9V031 / D9V032 WITH CO0210

(TGD1202 / TGD1203 / TGD1206 / TGD1207) (TGD3806)

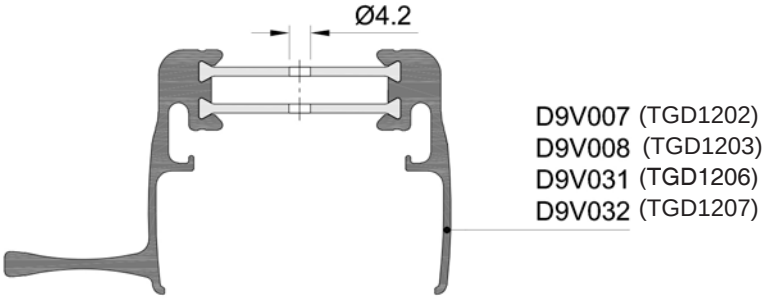

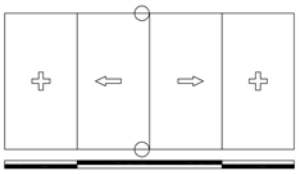

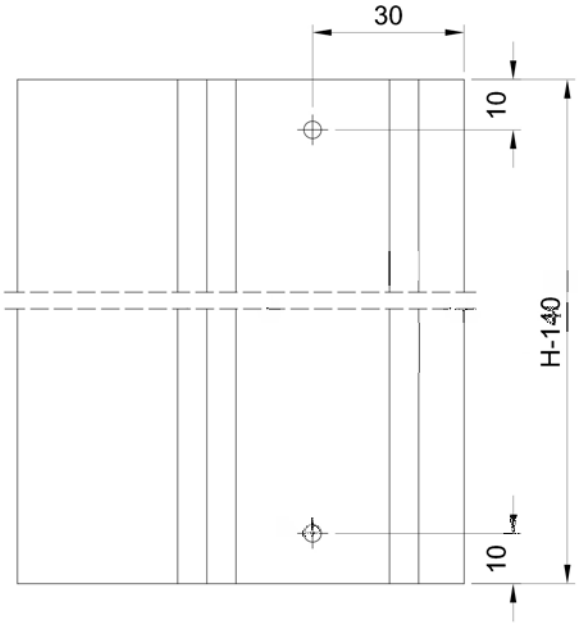

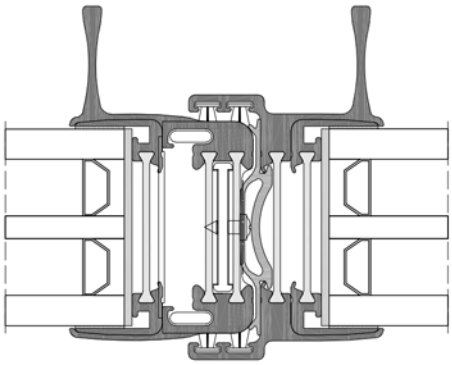

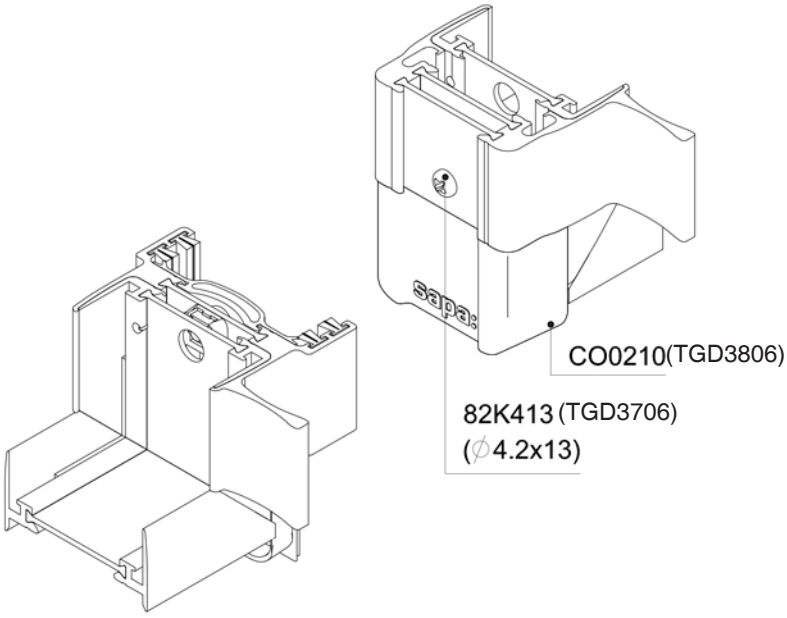

ART2-ASS-402

Hardware & assembly drawings

Assembly end pieces lock profile

D9V010 / D9V011 / D9V033 / D9V034 WITH CO0219

(TGD1204 / TGD1205 / TGD1208 / TGD1209) (TGD3807)

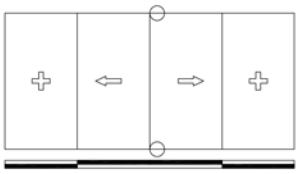

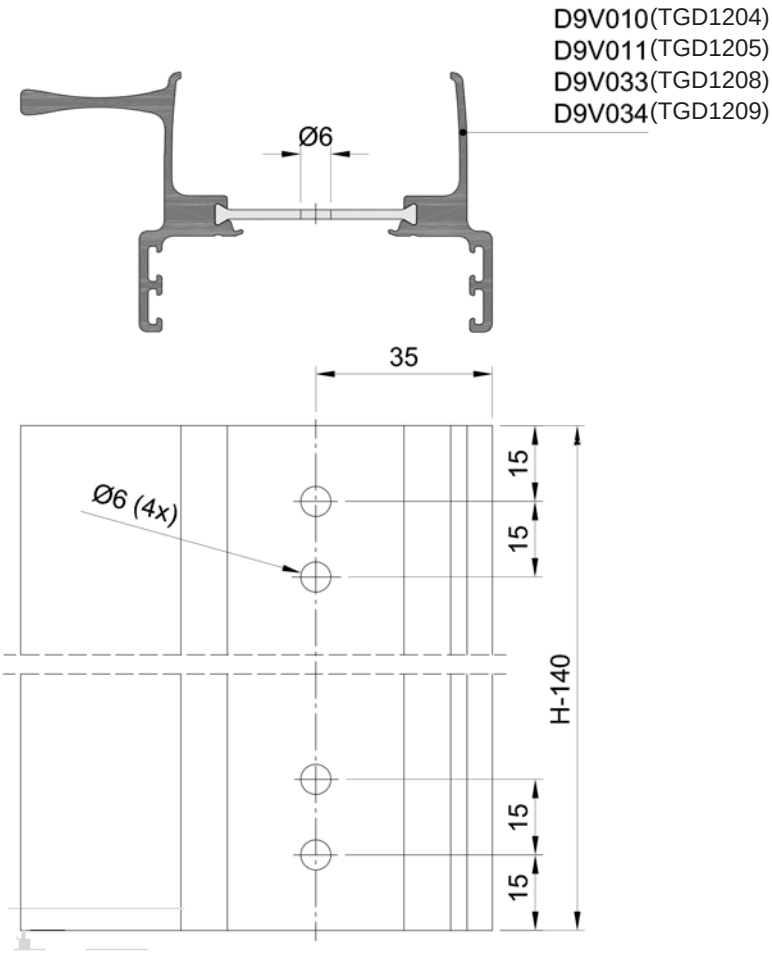

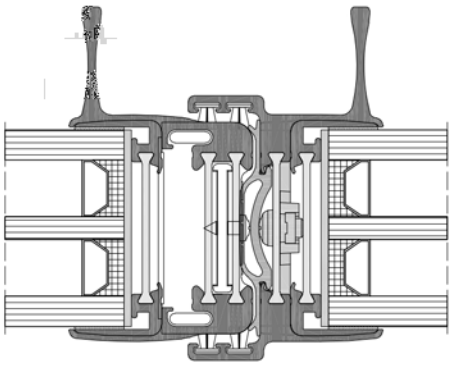

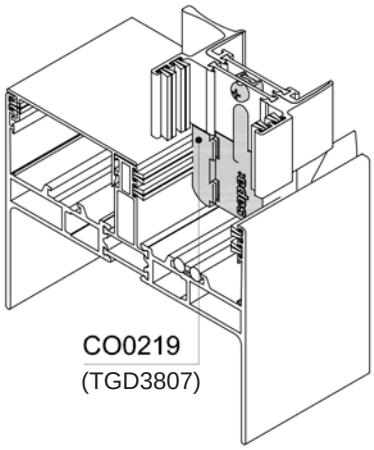

POSSIBLE FRAME COMBINATIONS

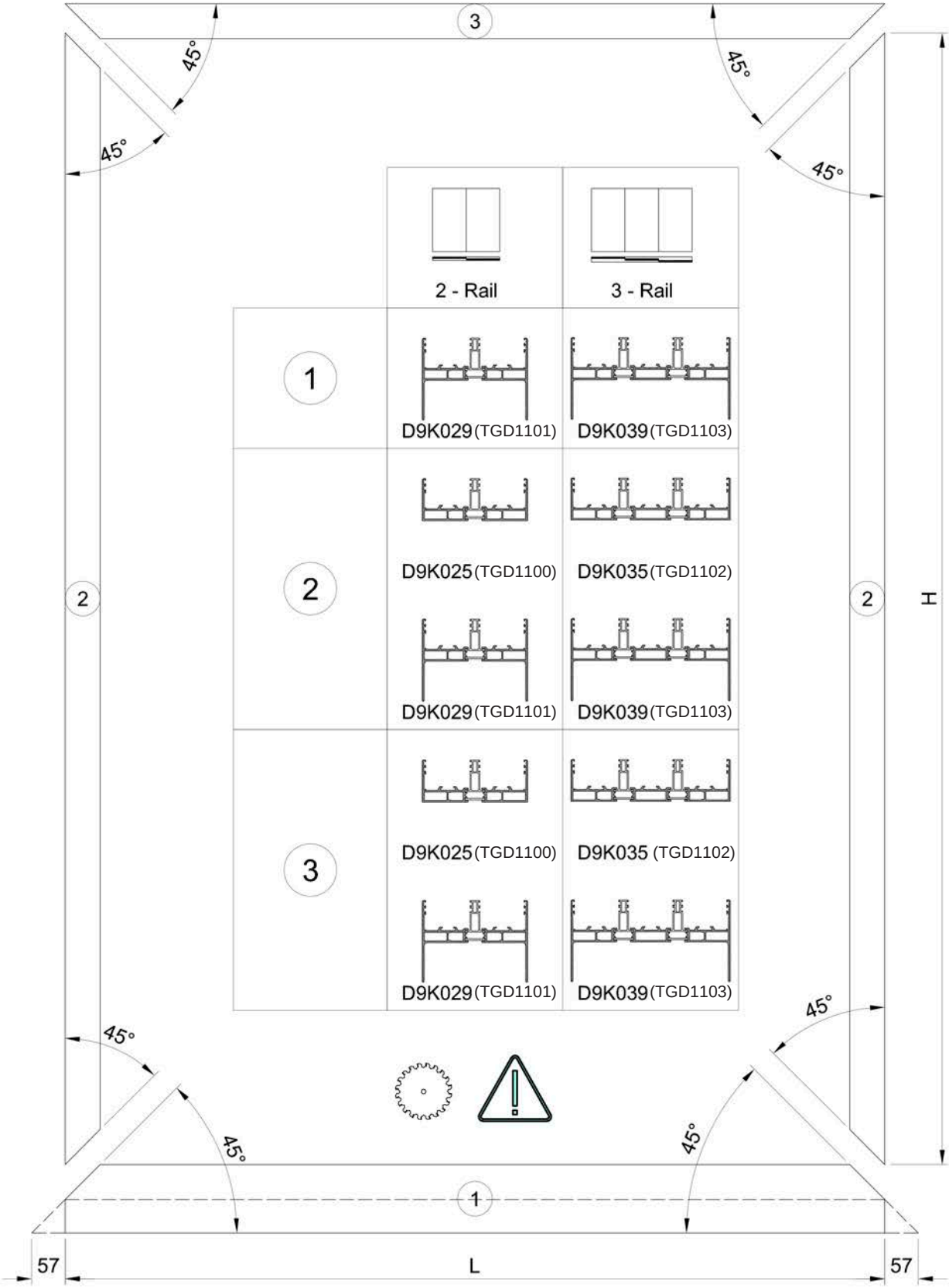

Hardware & assembly drawings

Assembly of frame

OPERATIONS ON FRAME: D9K029 / D9K039 (TGD1101 / TGD1003)

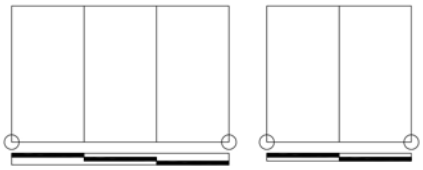

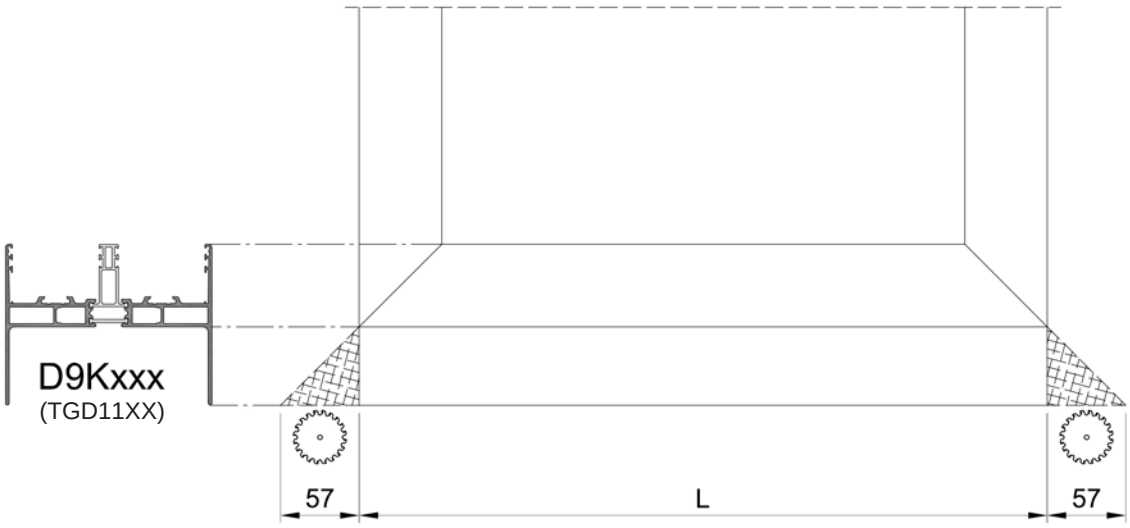

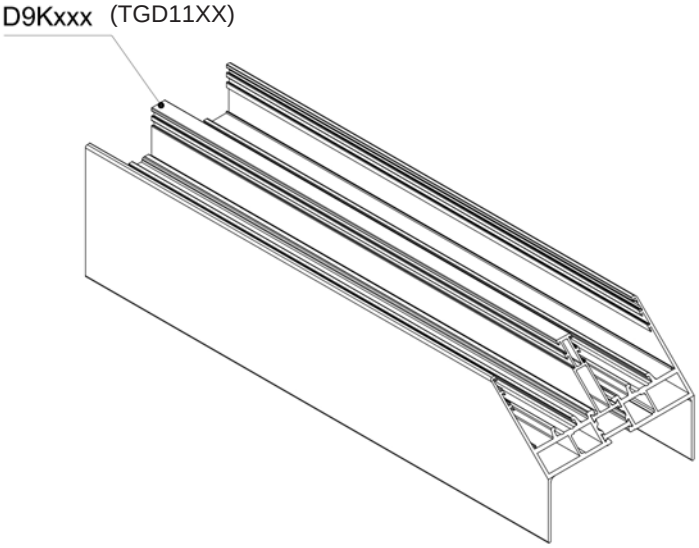

DRAINAGE FRAME: OVERVIEW

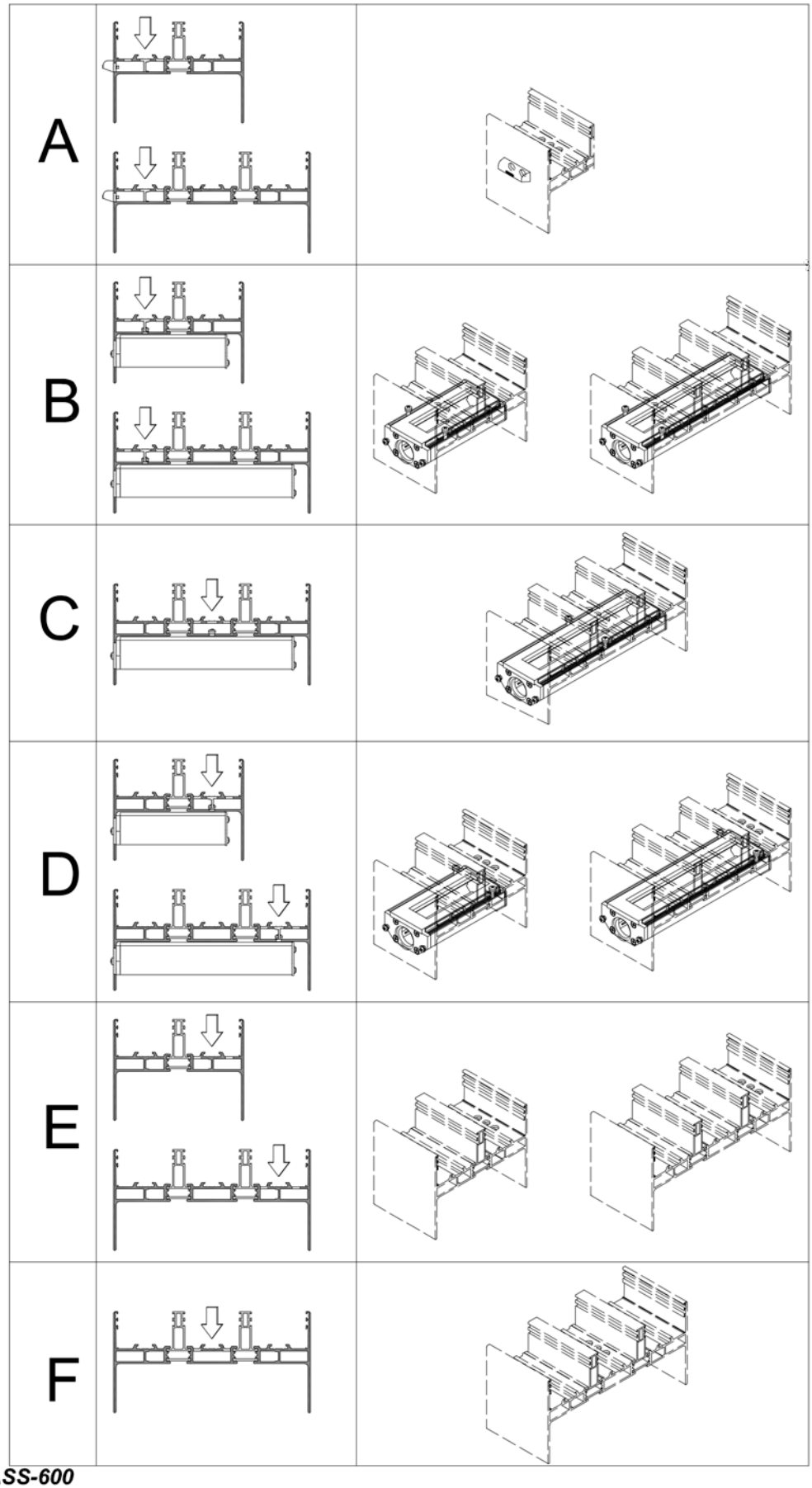

ART2-ASS-600

Hardware & assembly drawings

Drainage

TECHNAL®

DRAINAGE FRAME: OPERATIONS

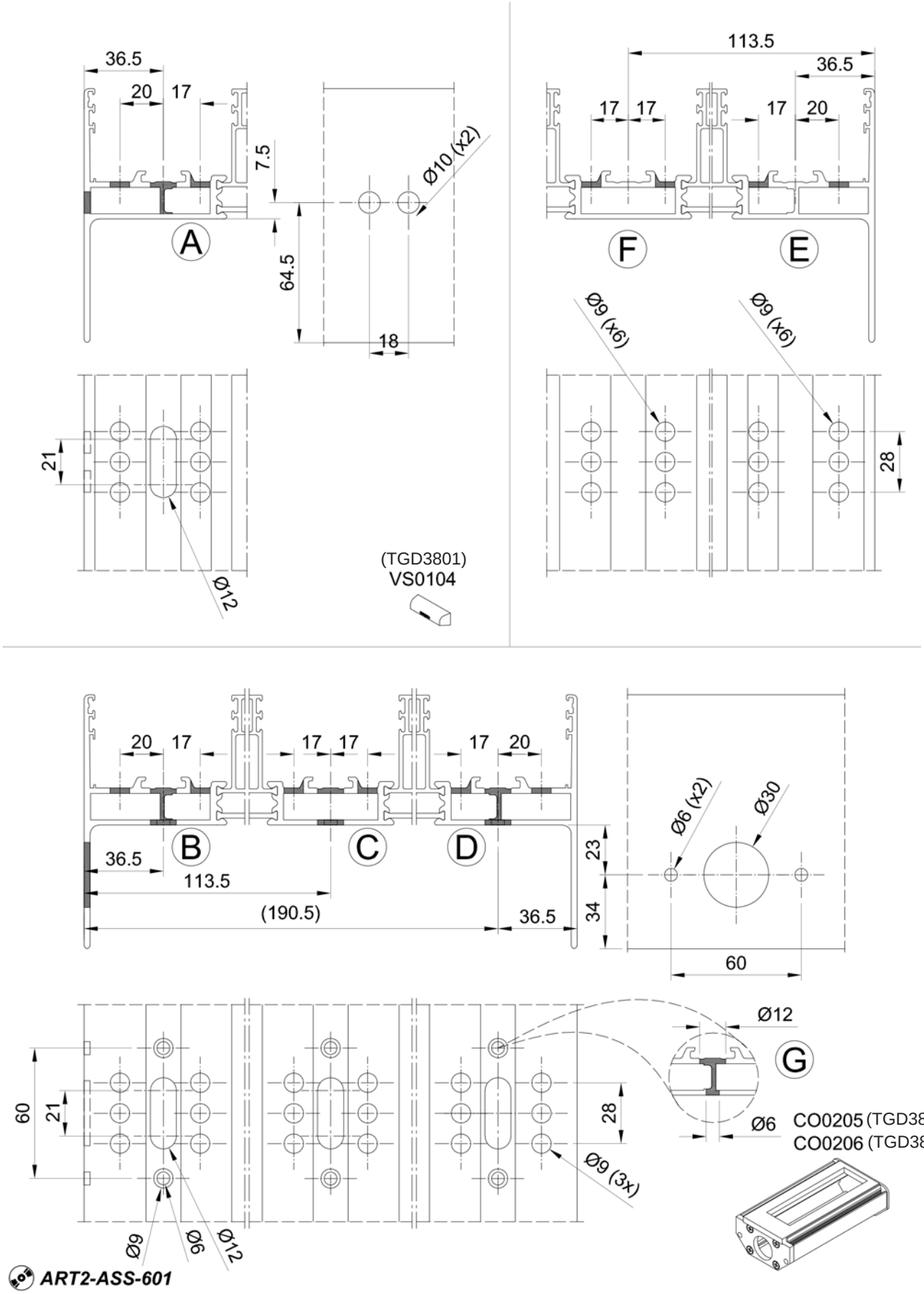

DRAINAGE FRAME: ASSEMBLY

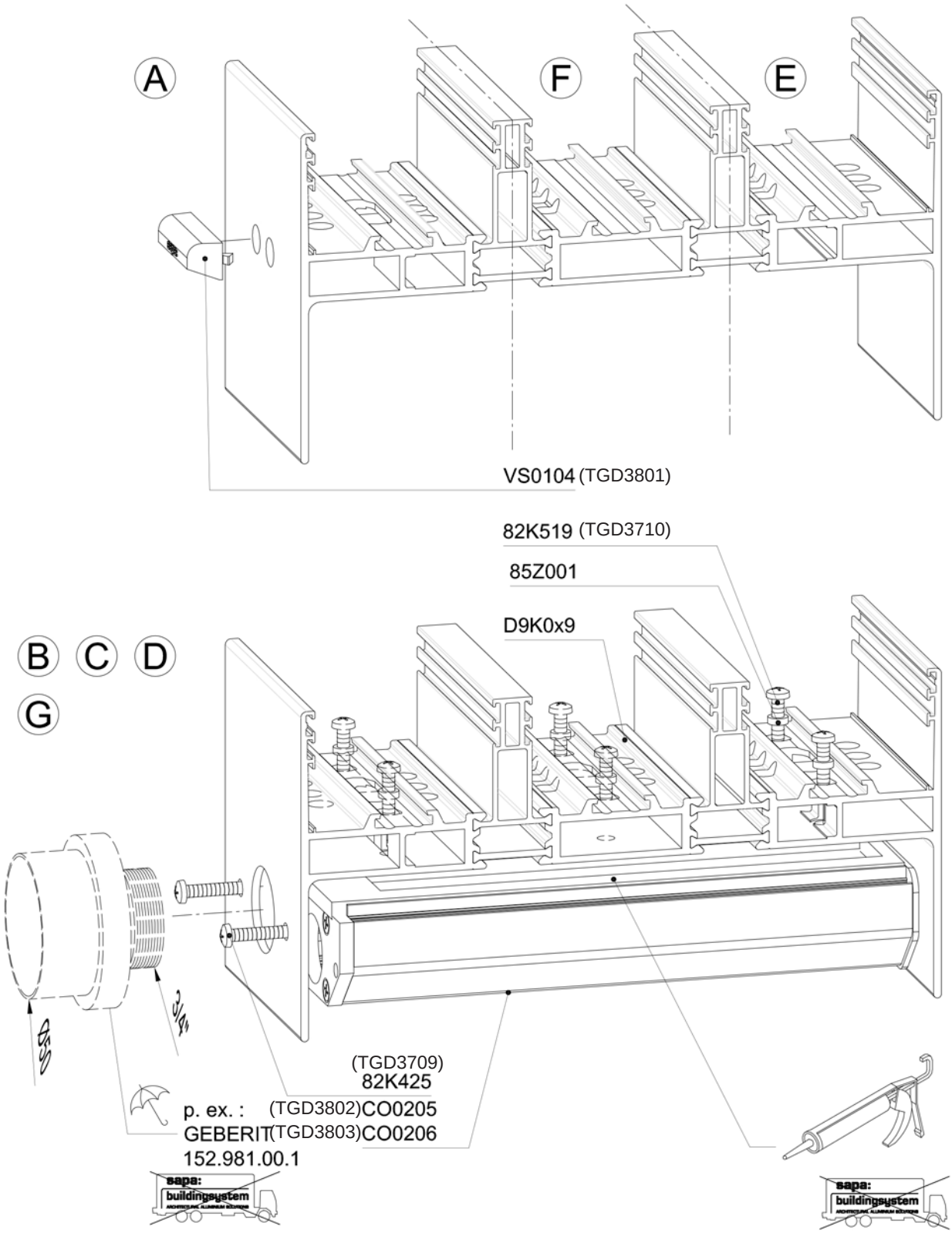

ART2-ASS-602

Hardware & assembly drawings

Drainage

TECHNAL®

DRAINAGE FRAME: 2-RAIL

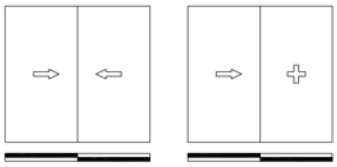

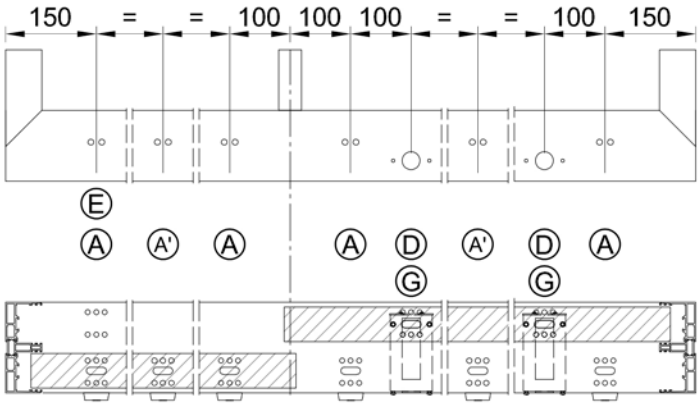

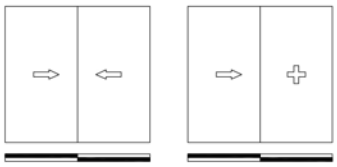

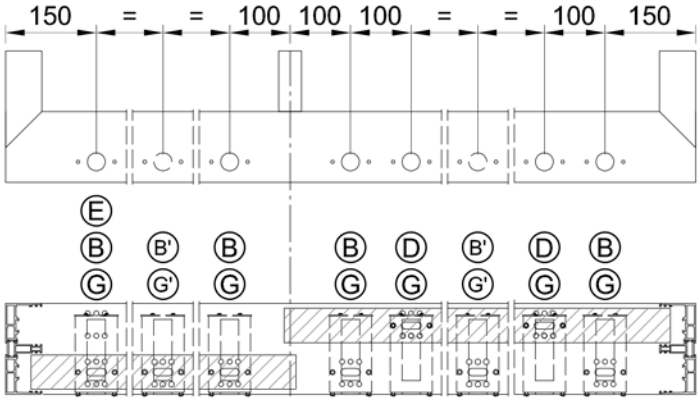

A': Additional for vent > 3m^2.
B'+ G': Additional for vent > 3m^2.

DRAINAGE FRAME: 3-RAIL

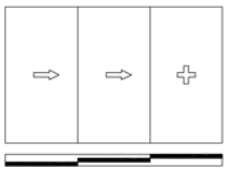

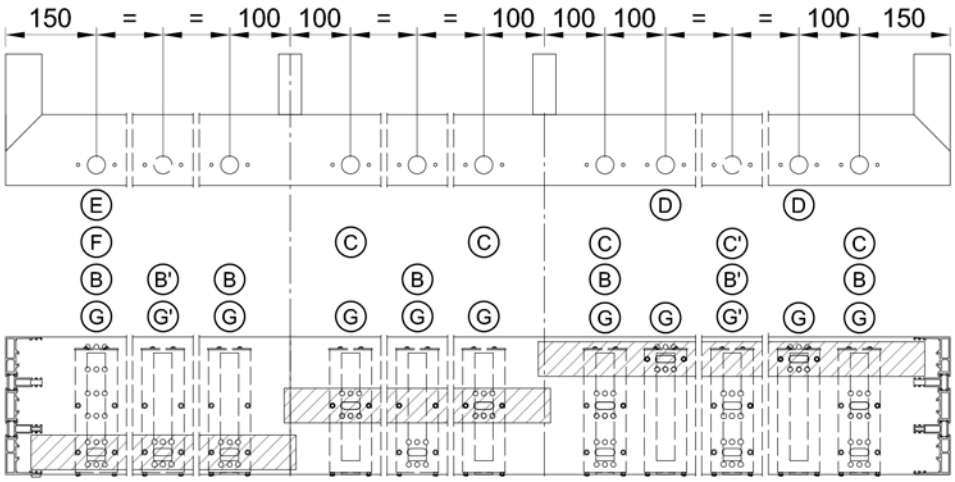

B': Additional for vent > 3m^2.
G': Additional for vent > 3m^2.

Hardware & assembly drawings

Drainage

TECHNAL®

DRAINAGE FRAME: 4-VENTS

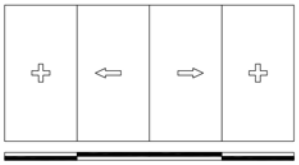

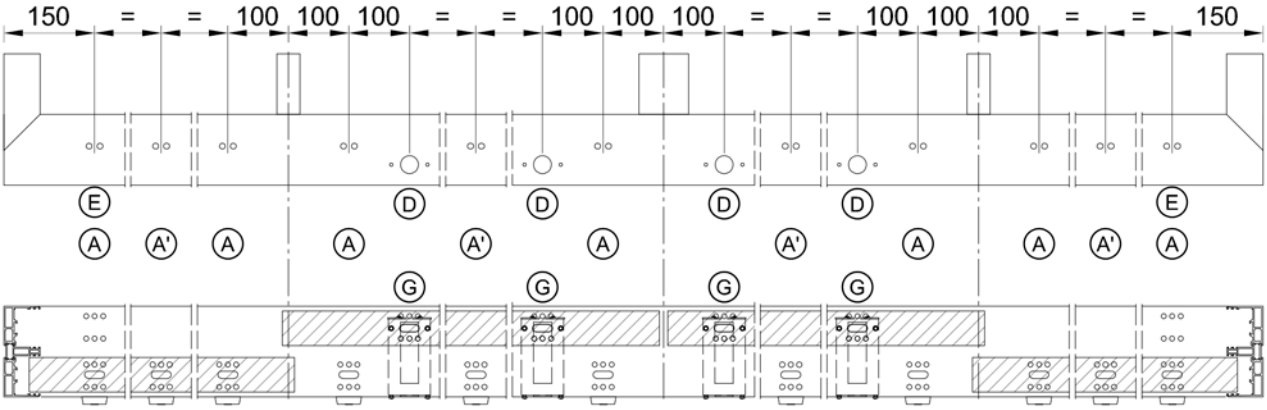

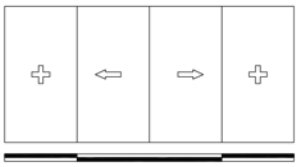

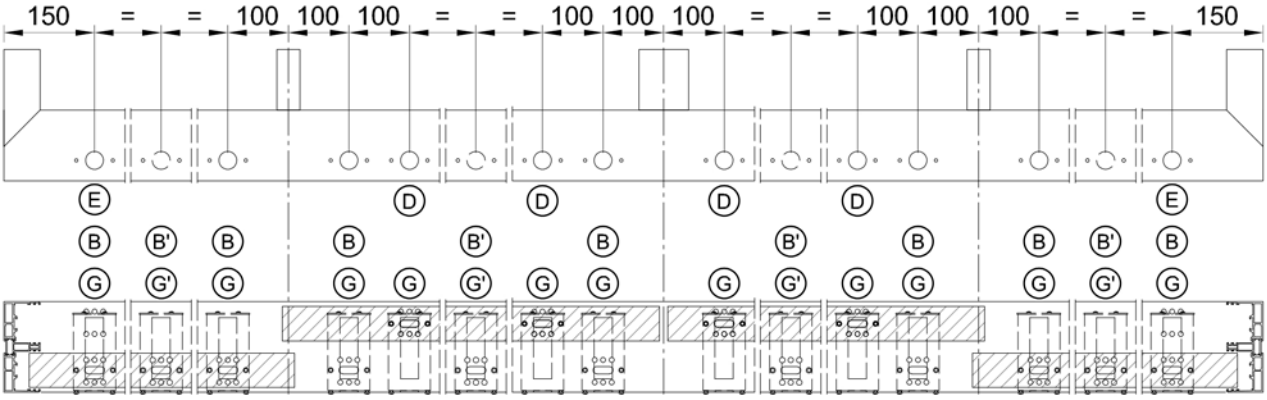

A': Additional for vent > 3m^2.
B'+ G': Additional for vent > 3m^2.

DRAINAGE FRAME: FIX-SLIDE-FIX

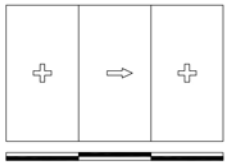

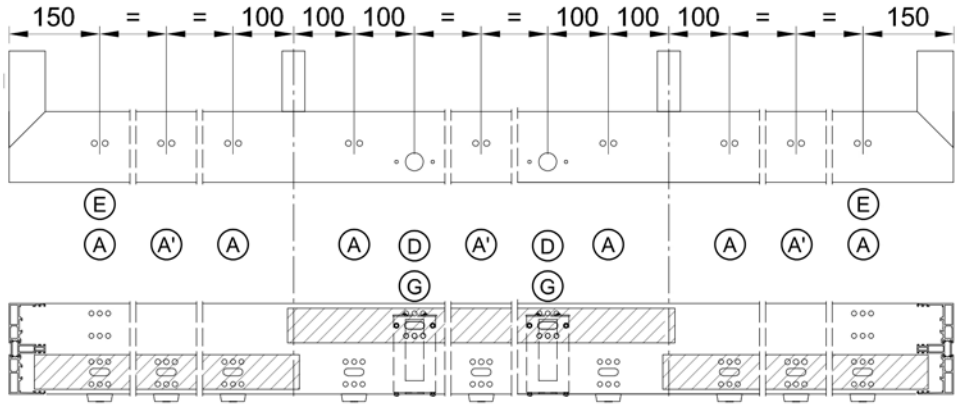

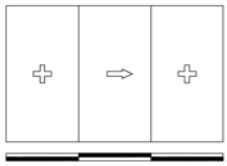

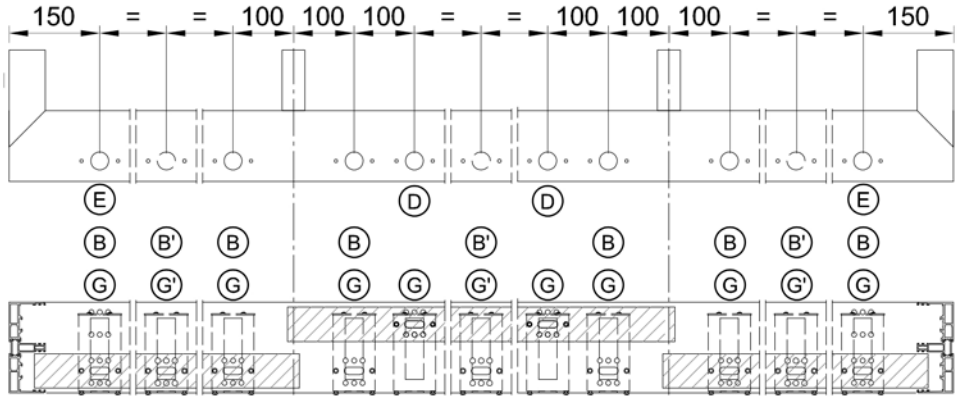

A': Additional for vent > 3m^2.
B'+ G': Additional for vent > 3m^2.

Hardware & assembly drawings

Corners

TECHNAL®

ASSEMBLY CORNERS

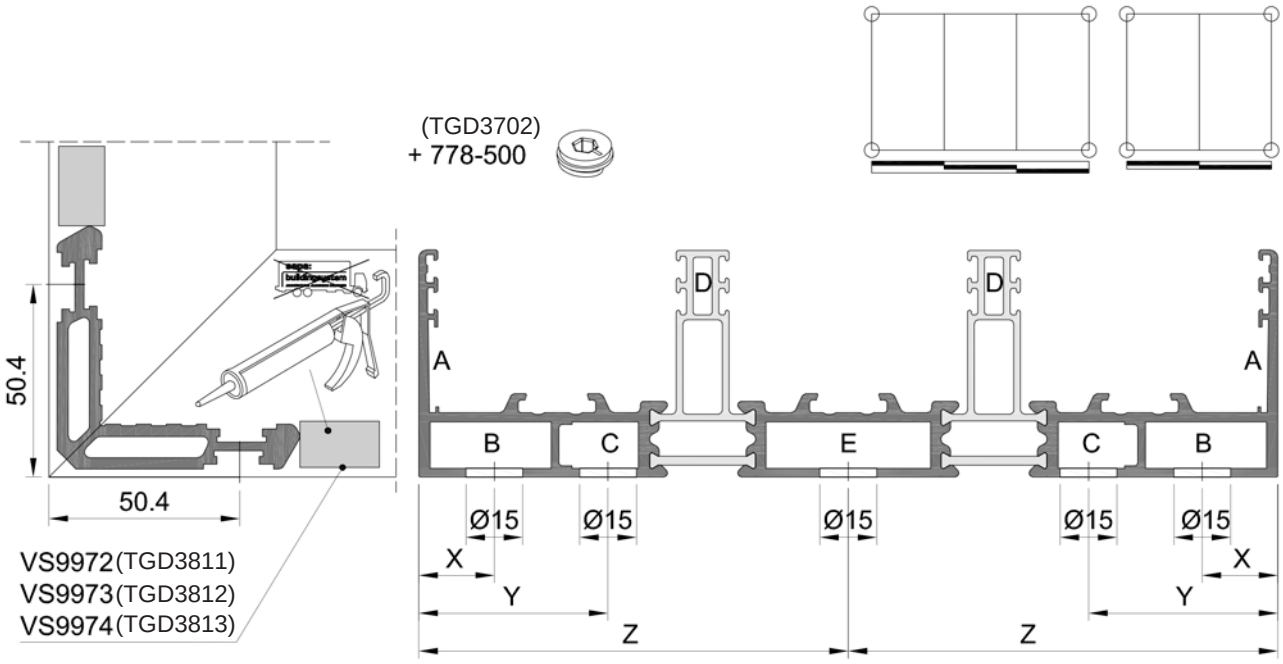

	X(mm)	Y(mm)	Z(mm)	A	B	C	D	E
D9K025 (TGD1100) D9K029 (TGD1101)	20	50	-	HV4M12 (TGD3607)	HV9M16 (TGD3602)	HV9M17 (TGD3603)	CO0153 (TGD3600)	-
D9K035 (TGD1102) D9K039 (TGD1103)	20	50	113,5	HV4M12 (TGD3607)	HV9M16 (TGD3602)	HV9M17 (TGD3603)	CO0153 (TGD3600)	HV9M15 (TGD3601)

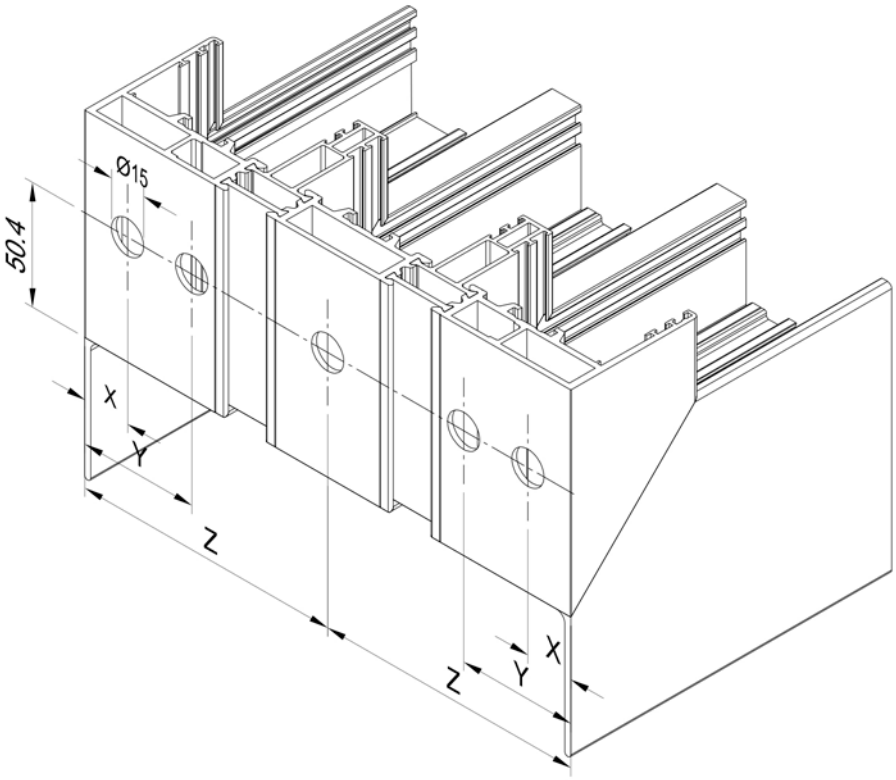

ART2-ASS-700

ASSEMBLY CO0153 (TGD3600)

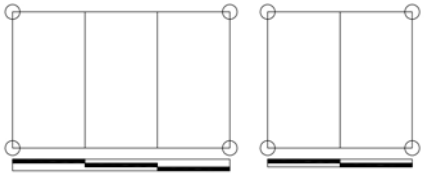

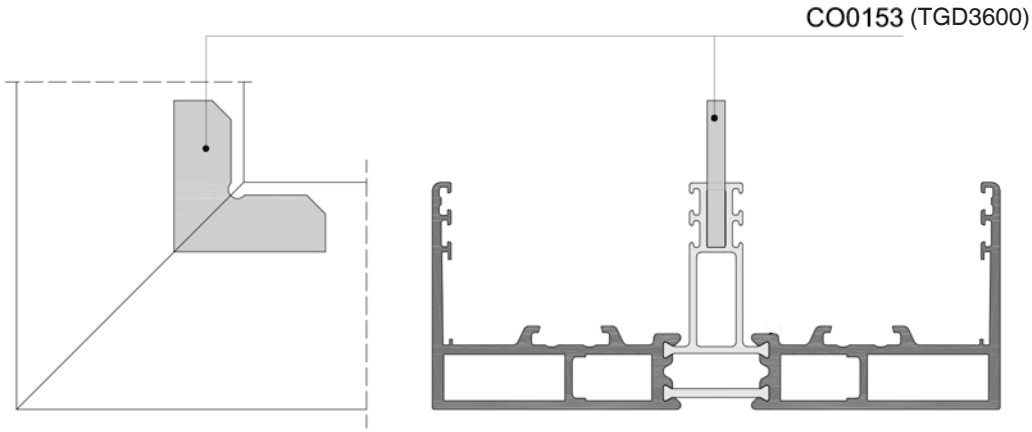

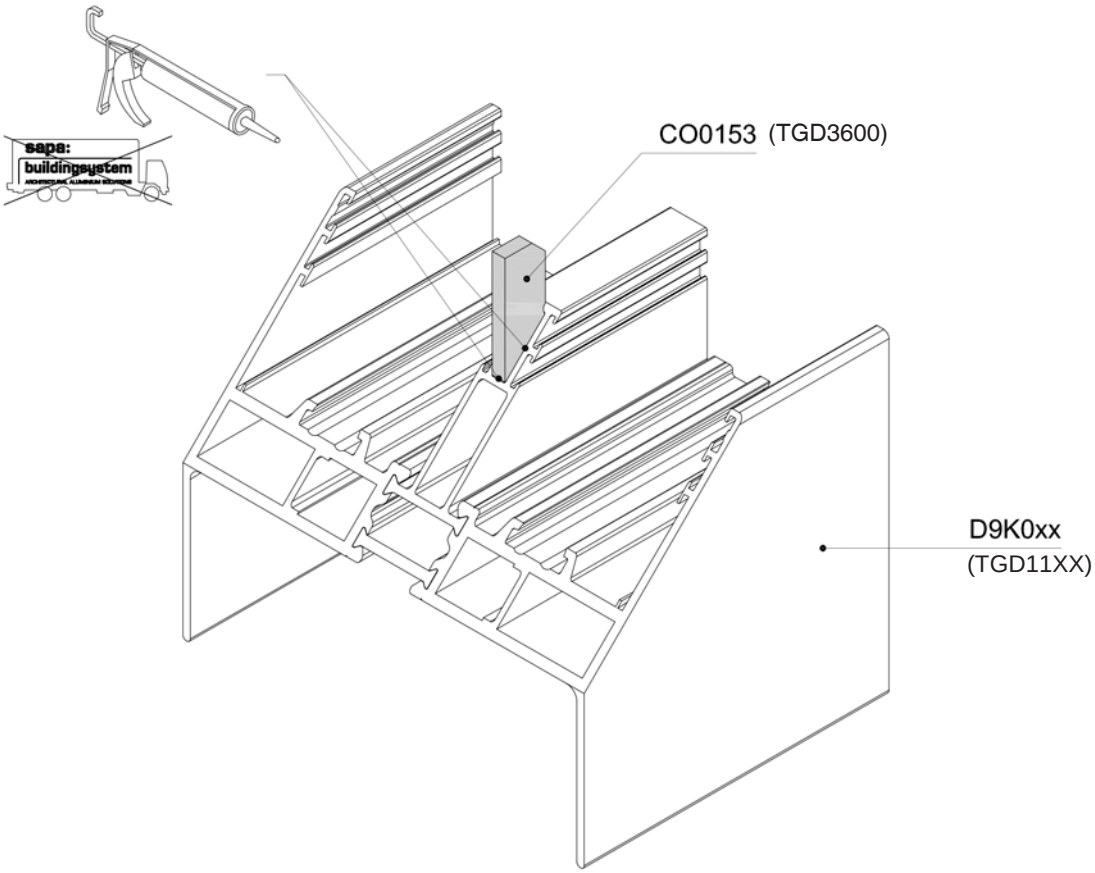

ART2-ASS-701

Hardware & assembly drawings

Corners

ASSEMBLY LEVELING SUPPORT HV4M12 (TGD3607)

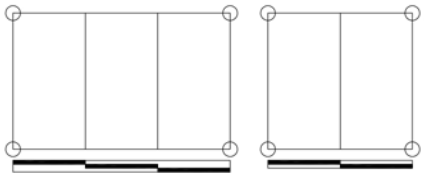

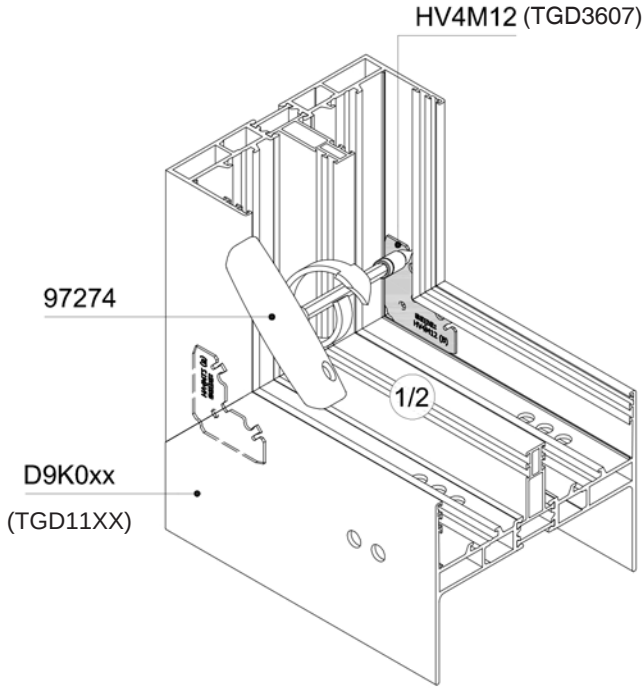

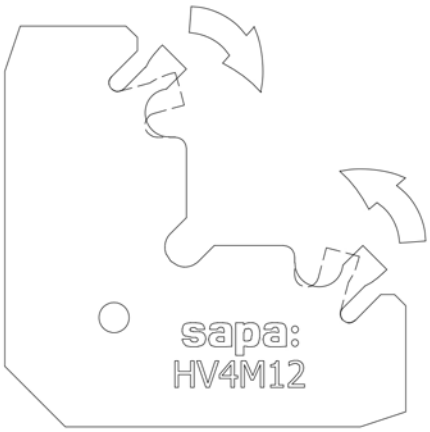

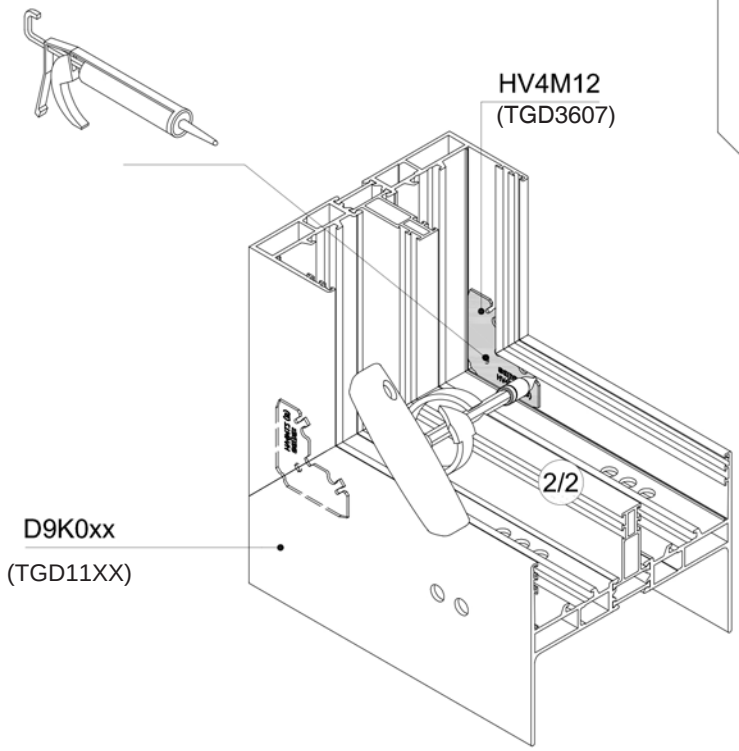

ART2-ASS-705

SUPPORT PIECE CO0200 FOR 3-RAIL
(TGD6000)

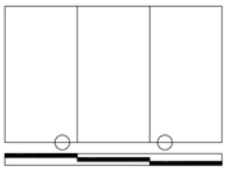

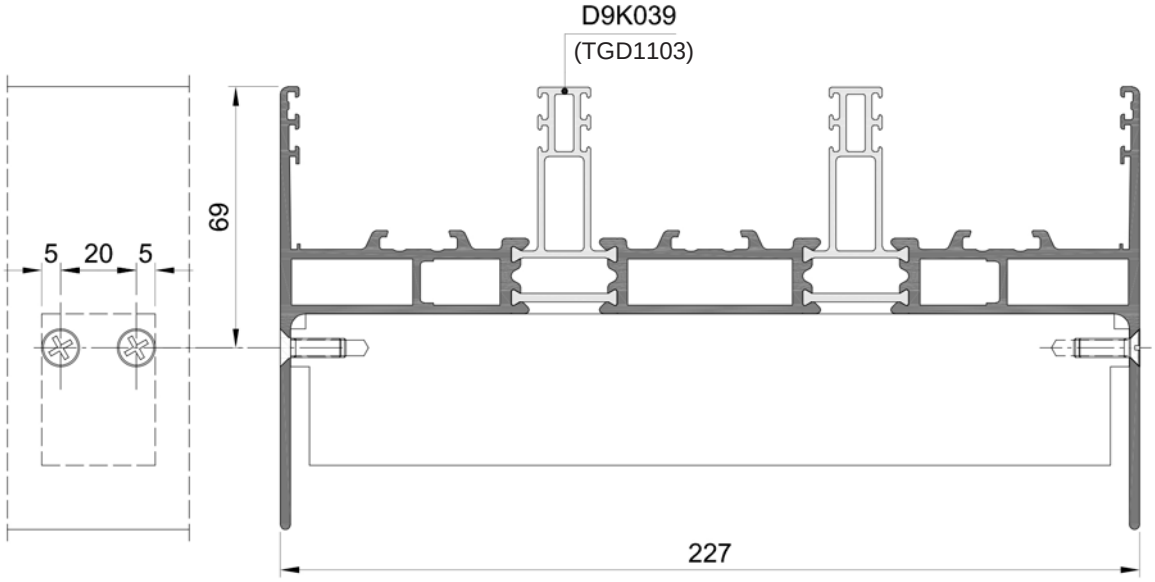

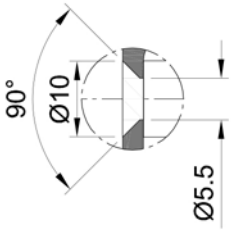

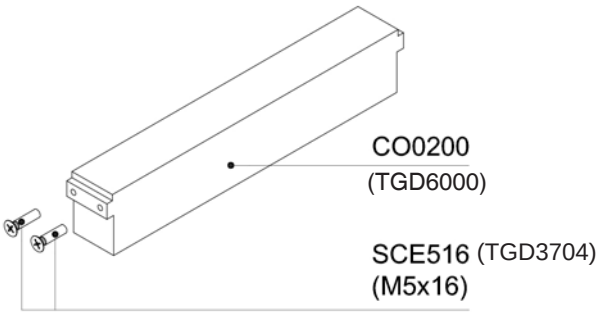

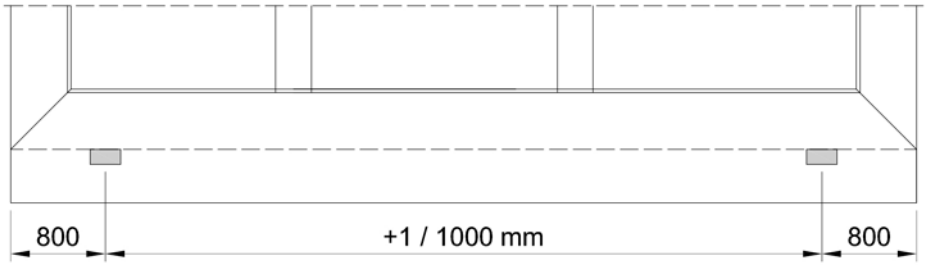

ART2-ASS-702

CO0200 (TGD6000) must be used to avoid bending of frame due to sash weight.

Hardware & assembly drawings

Corners

FRAME EXTENSION: CO1141 / CO1142 (TGD3613 / TGD3614)

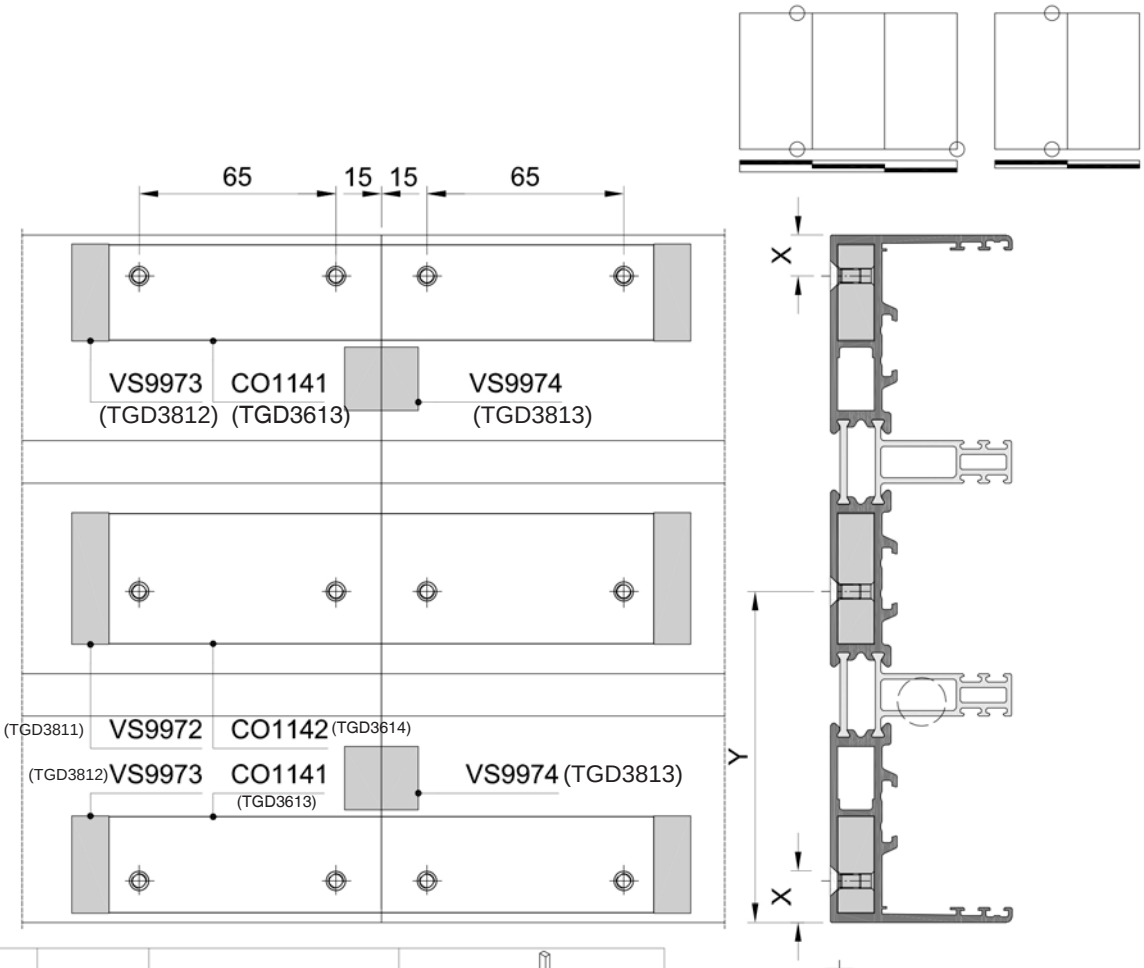

X(mm)	Y(mm)		
13,5	-	D9K025, D9K029 (TGD1100,TGD1101)	CO1141 (TGD3613)
13,5	110	D9K035, D9K039 (TGD1102,TGD1103)	CO1141 / CO1142 (TGD3613 / TGD3614)

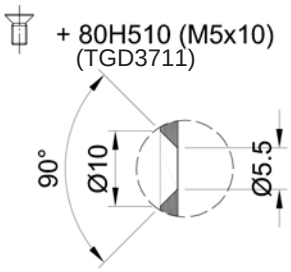

POSITION OF SPLIT

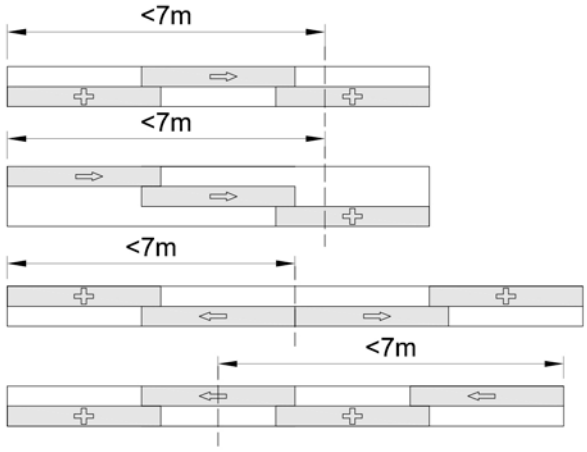

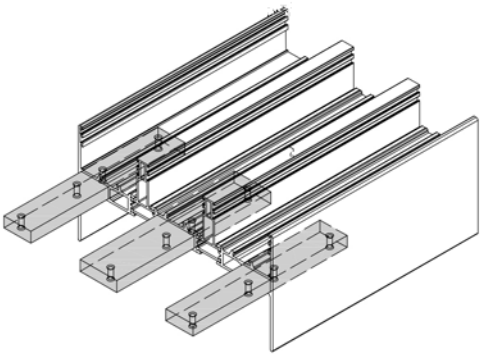

ASSEMBLY HV9N03: HORIZONTAL CORNER 90°

(TGD3605)

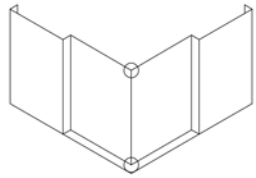

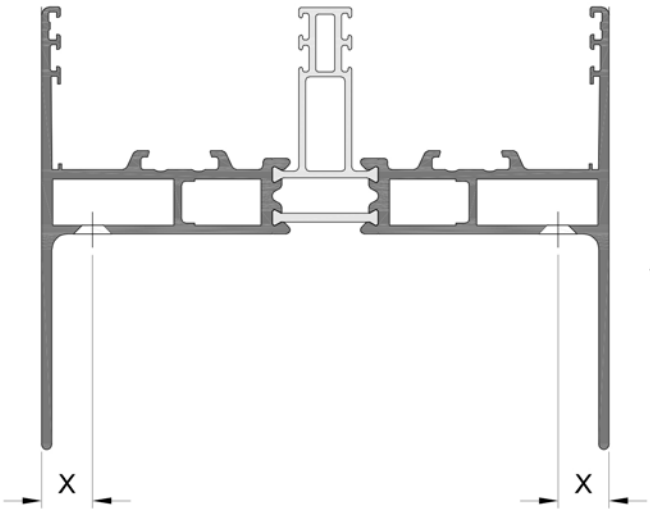

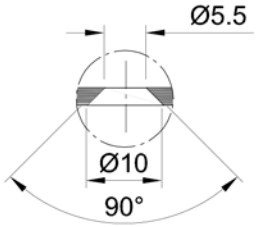

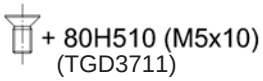

X(mm)		
13,5	D9K025, D9K029 (TGD1100,TGD1101)	HV9N03 (TGD3605)
13,5	D9K035, D9K039 (TGD1102,TGD1103)	HV9N03 (TGD3605)

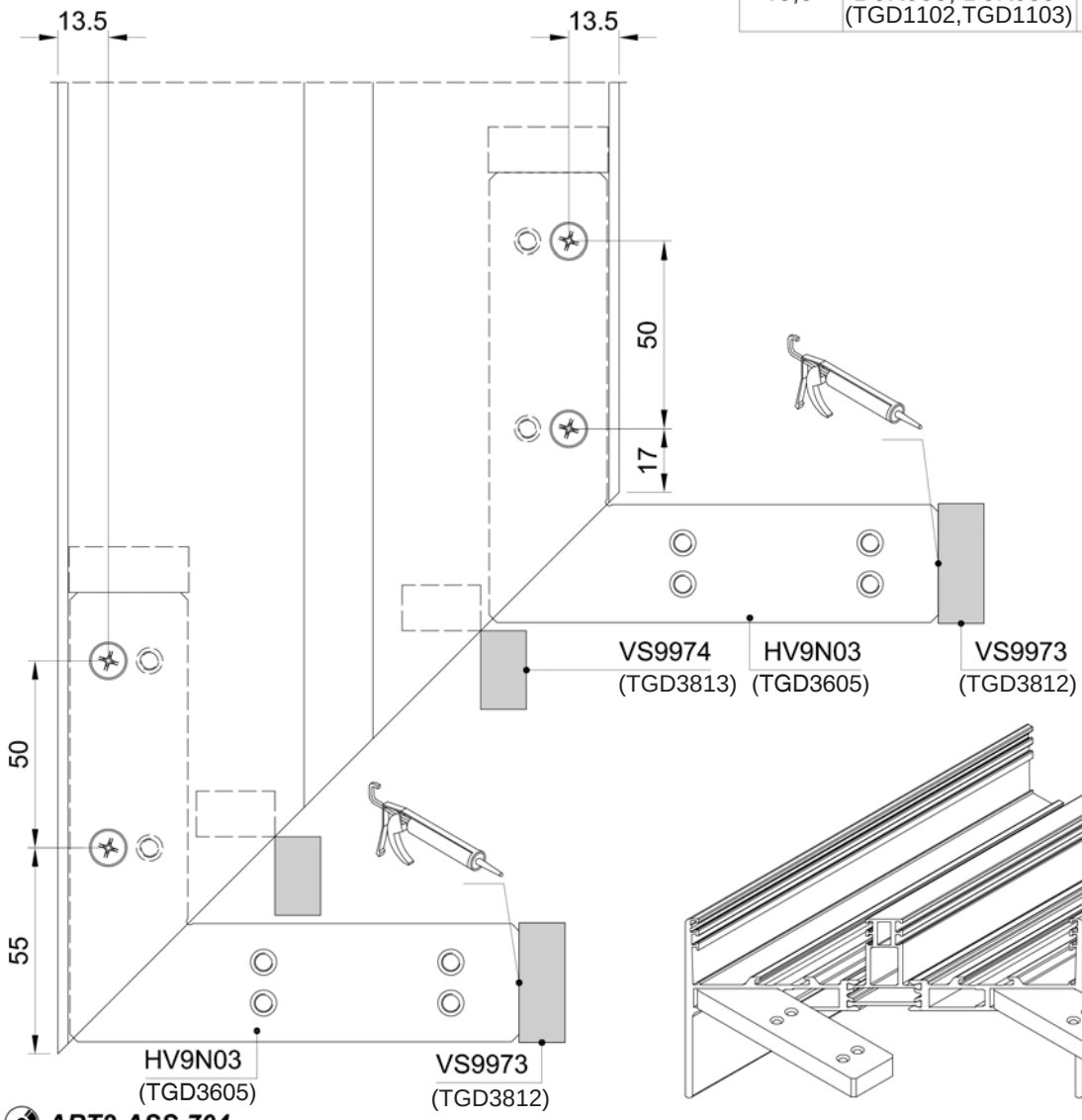

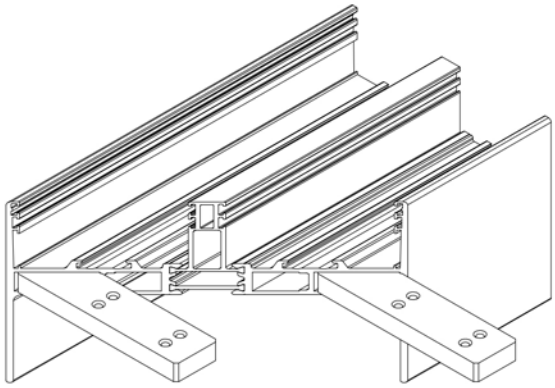

ART2-ASS-704

Hardware & assembly drawings

Sealing pieces interlock

TECHNAL®

CENTRAL SEALING PIECE VS1420 - BOTTOM - 38 MM
(TGD3809)

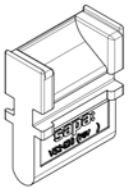

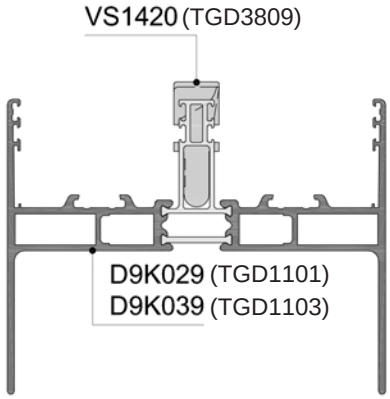

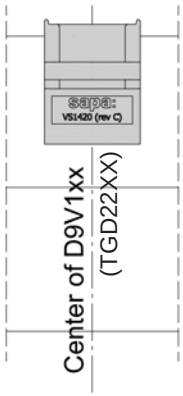

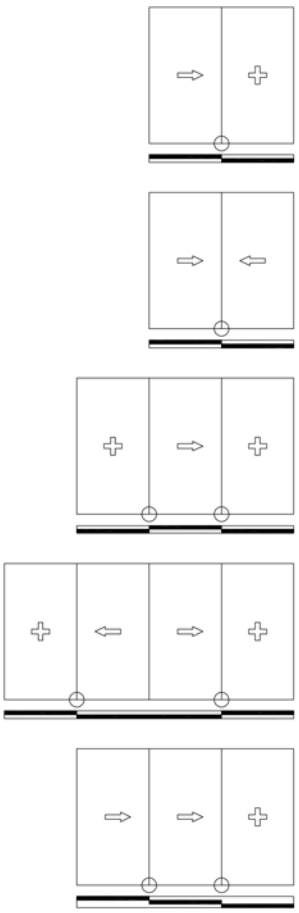

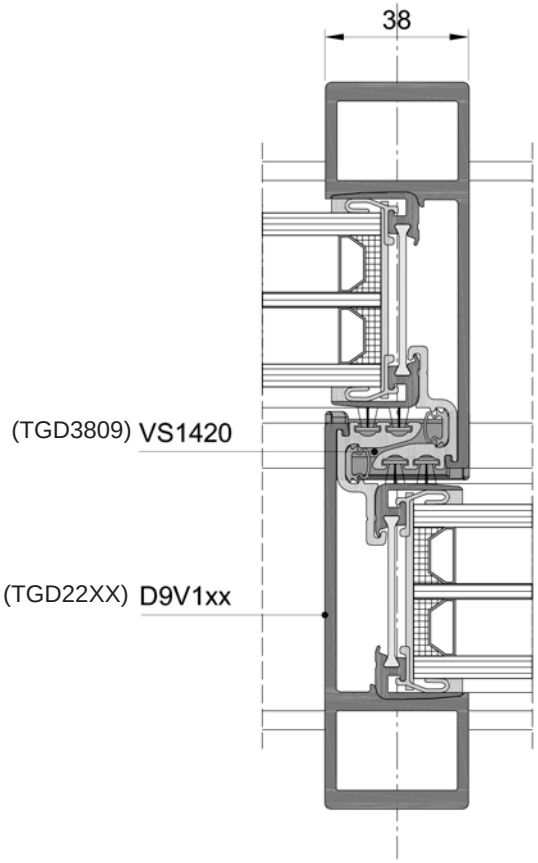

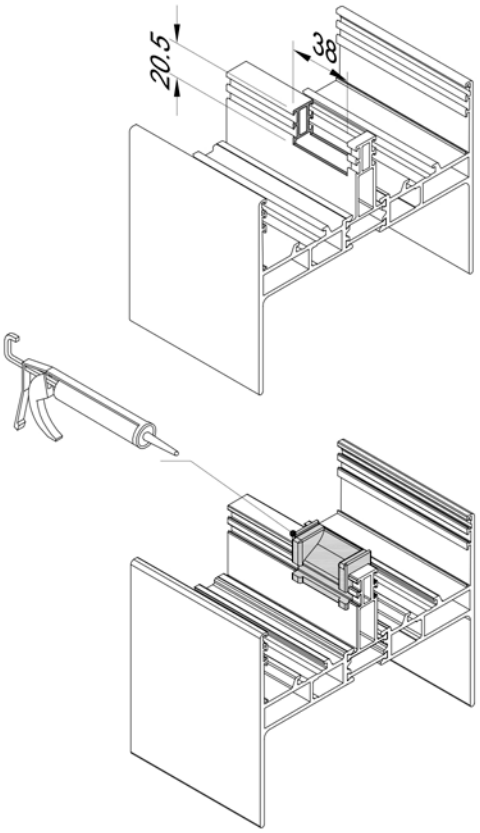

ART2-ASS-800

CENTRAL SEALING PIECE CO1131 - TOP

(TGD3810)

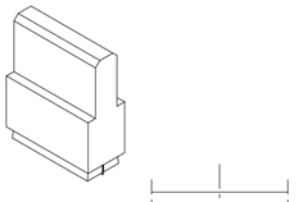

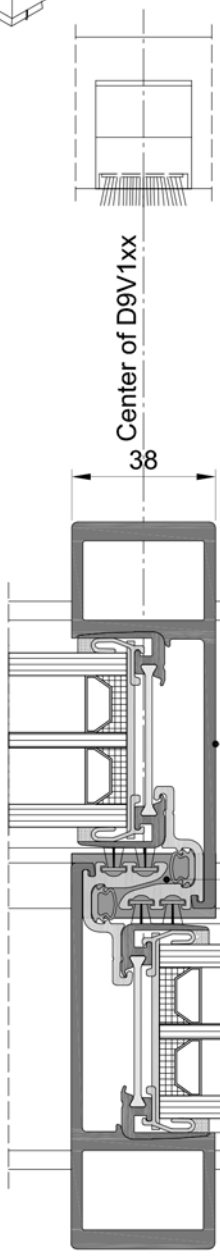

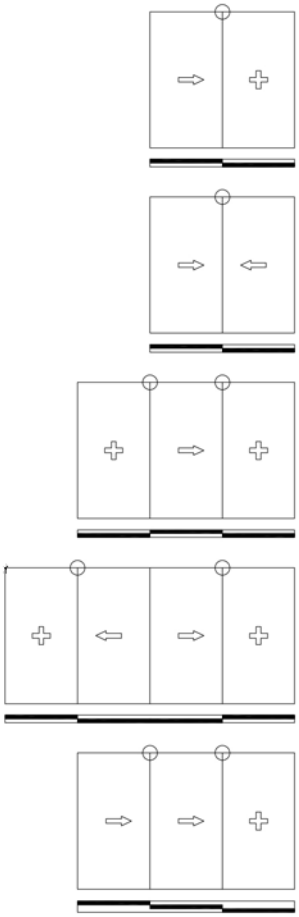

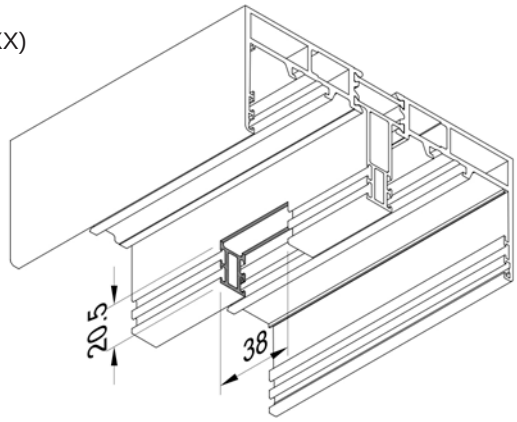

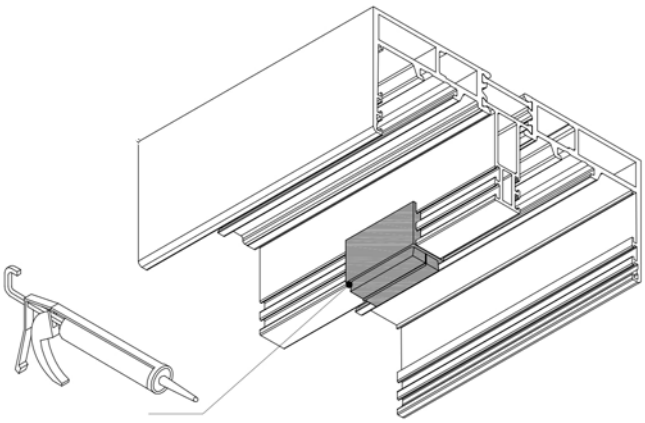

ART2-ASS-801

Hardware & assembly drawings

Sealing pieces interlock

SEALING PIECE

+ Assembly interlock

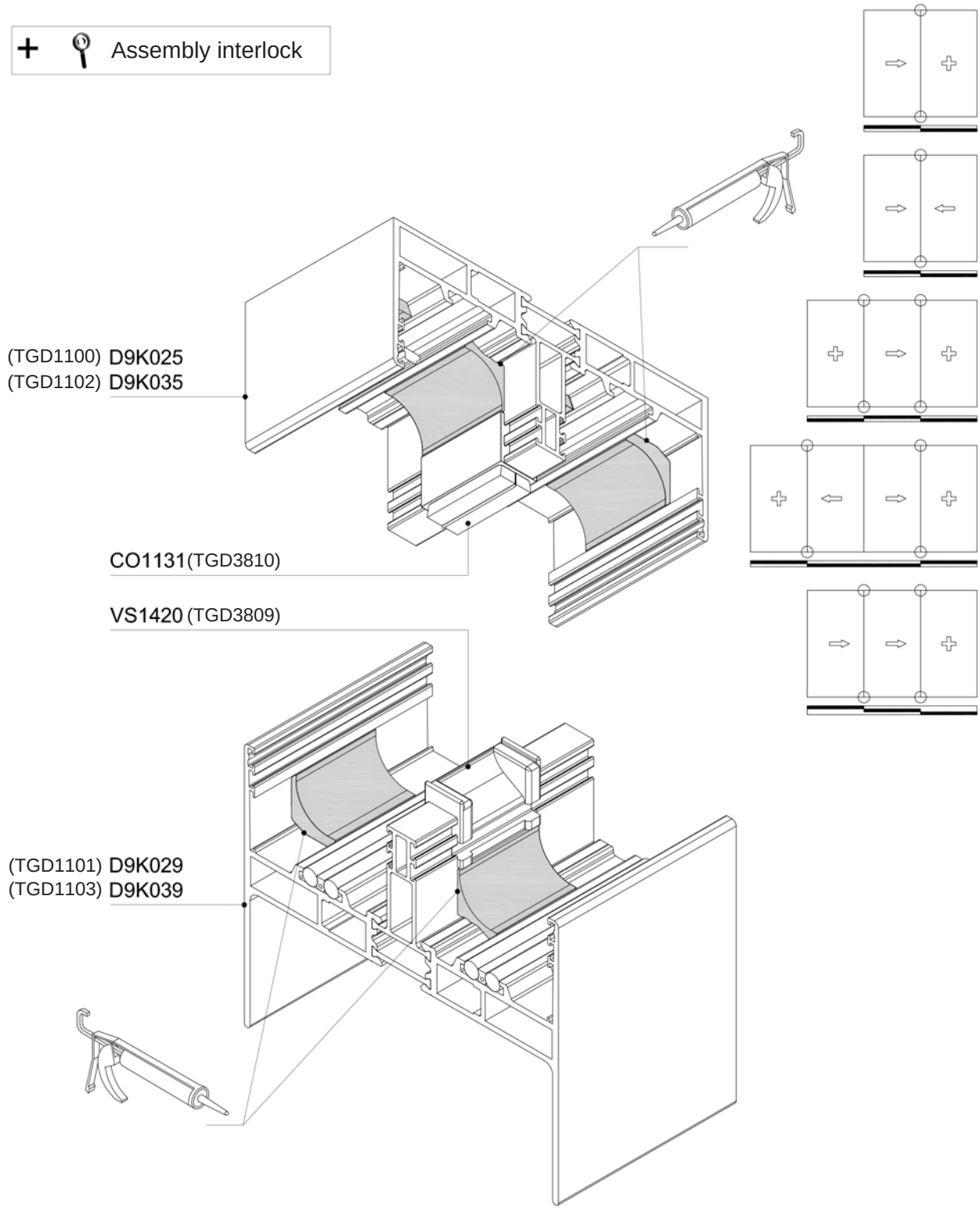

ART2-ASS-802

INSTALLATION OF FIXED VENT

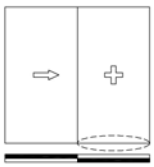

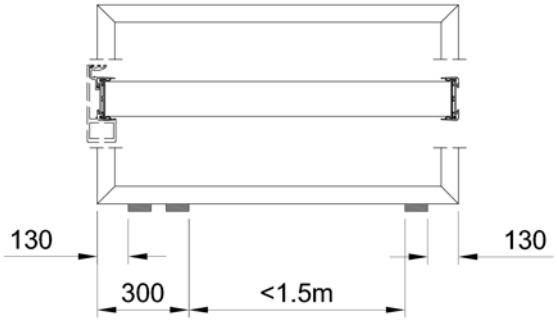

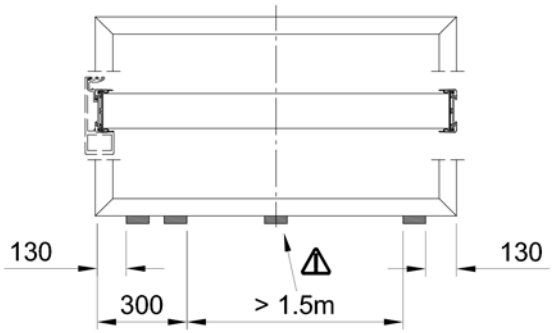

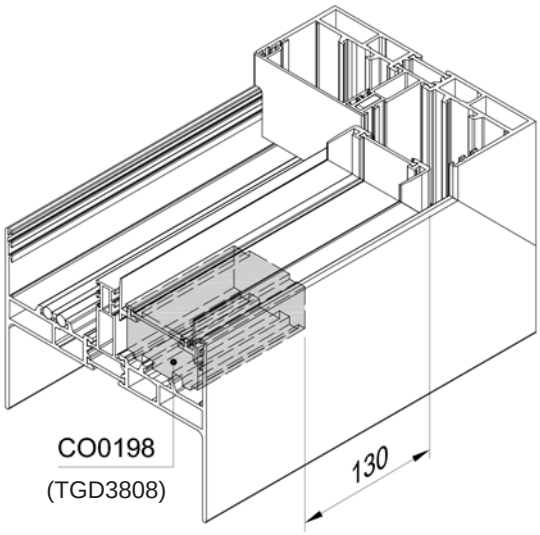

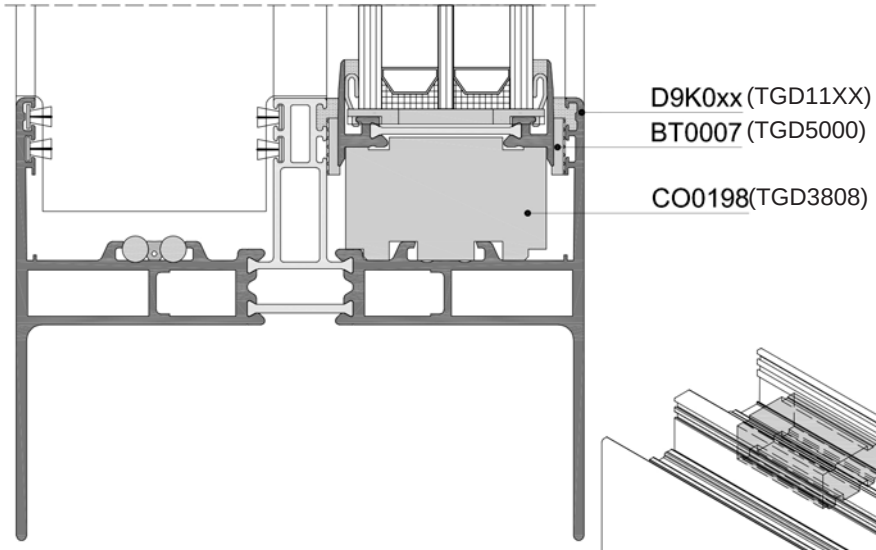

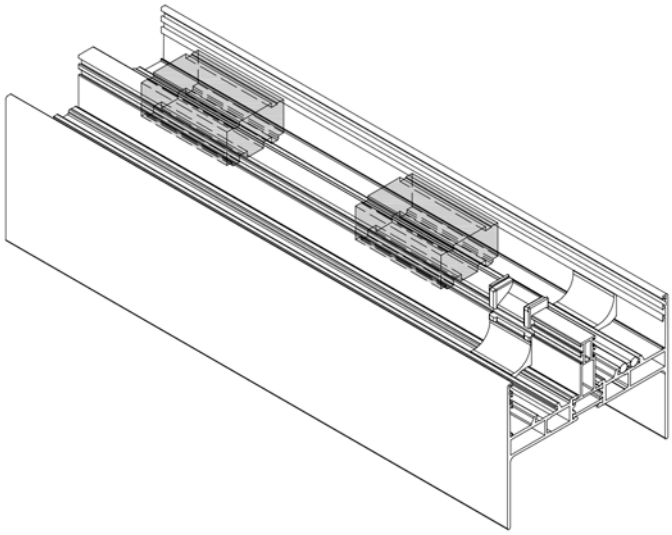

ART2-ASS-900

Hardware & assembly drawings

Installation vent

TECHNAL®

INSTALLATION OF FIXED VENT - GLASS WITHOUT PROFILES

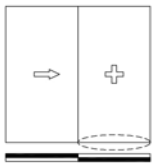

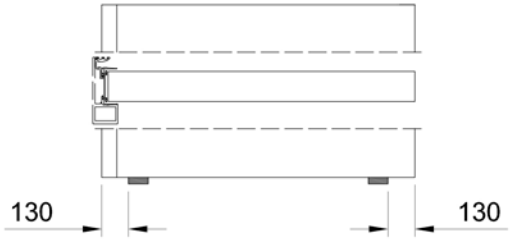

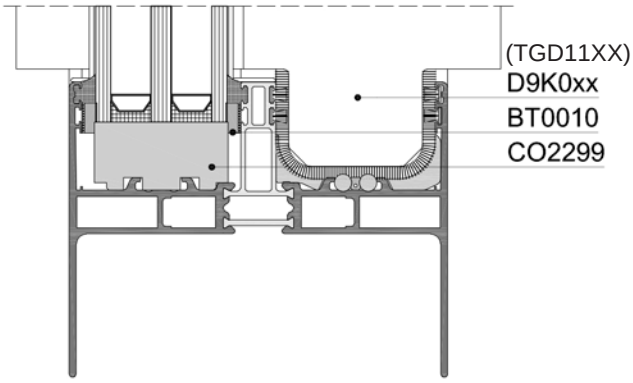

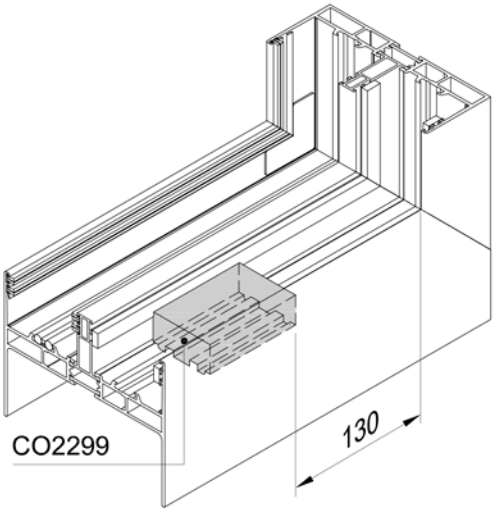

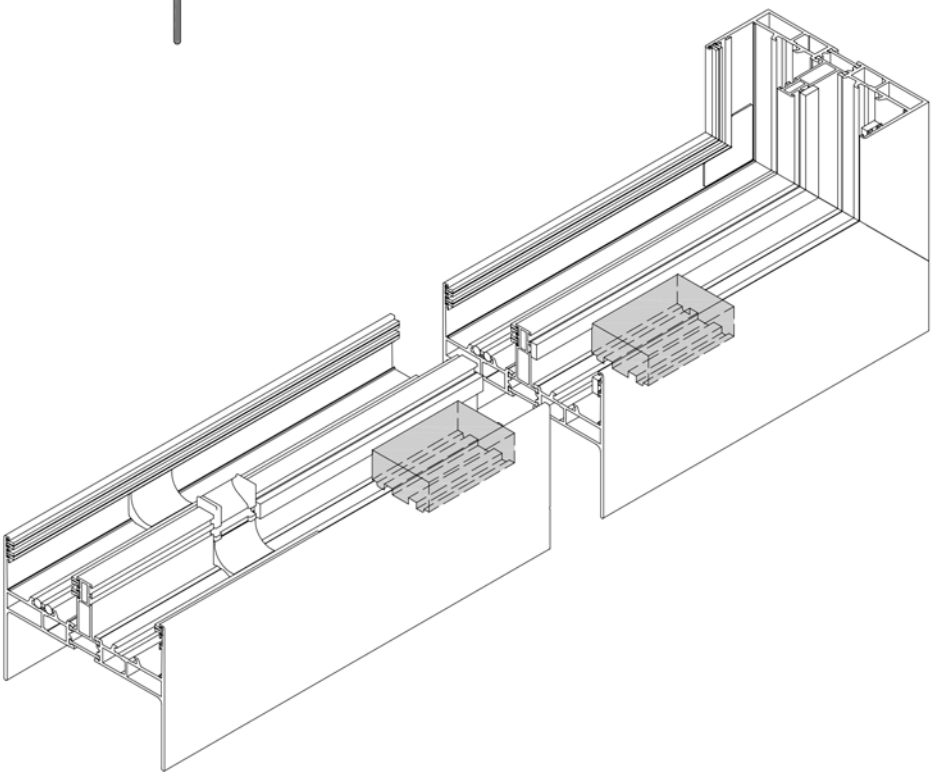

ART2-ASS-906

OPERATION ON GASKET RU9152 / RU9153 (TGD5003 / TGD5004)

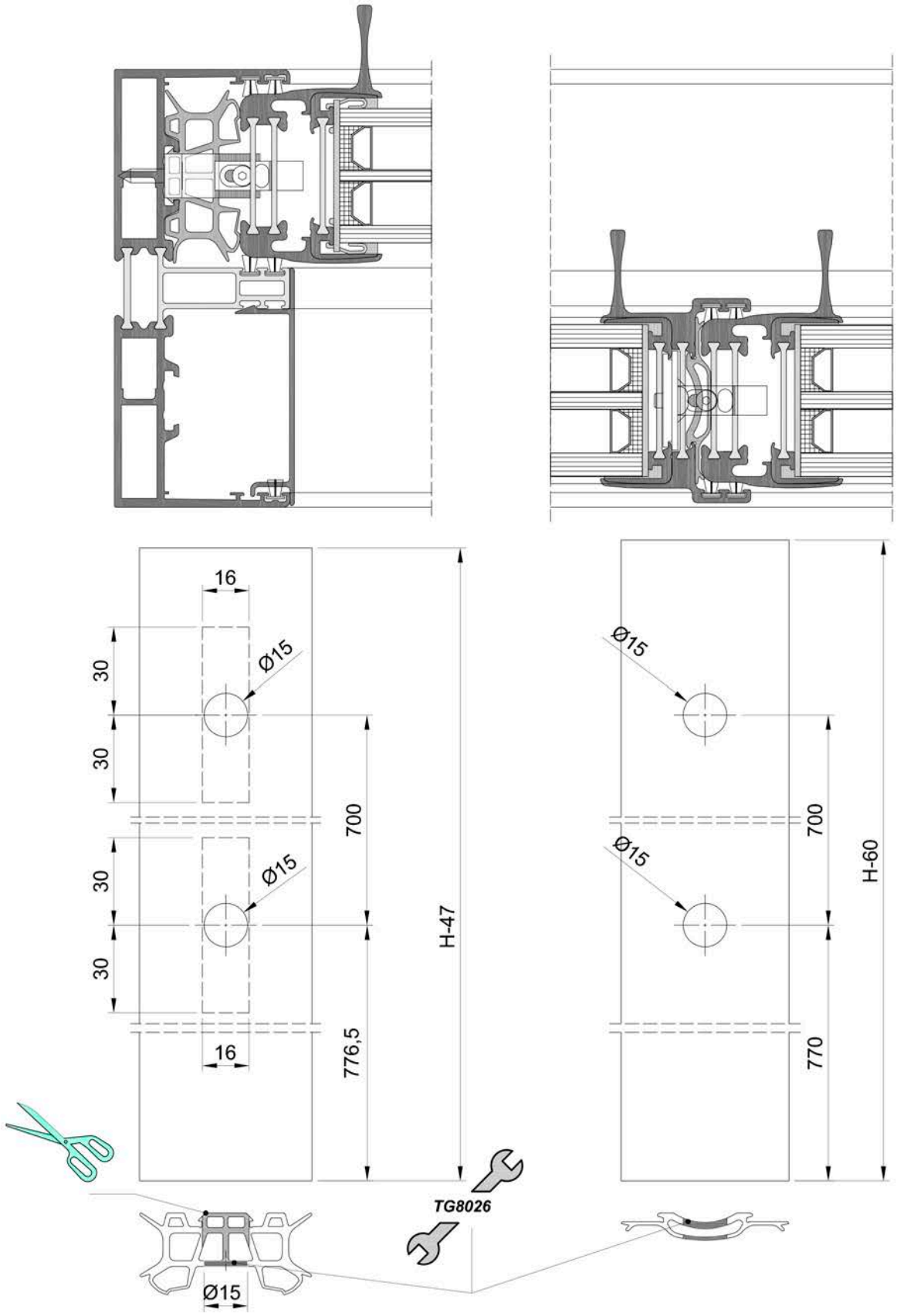

ART2-ASS-901

In combination with D9C001. (TGD1210)

All dimensions refer to handle at 1150 mm from bottom of vent.

Hardware & assembly drawings

Buffers

TECHNAL®

BUFFER KIT CO0180 IN MONORAIL
(TGD3610)

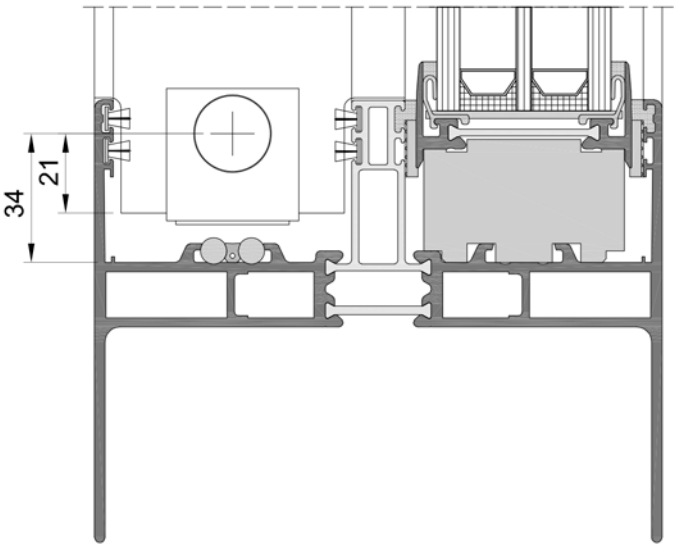

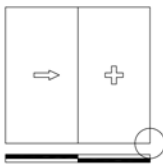

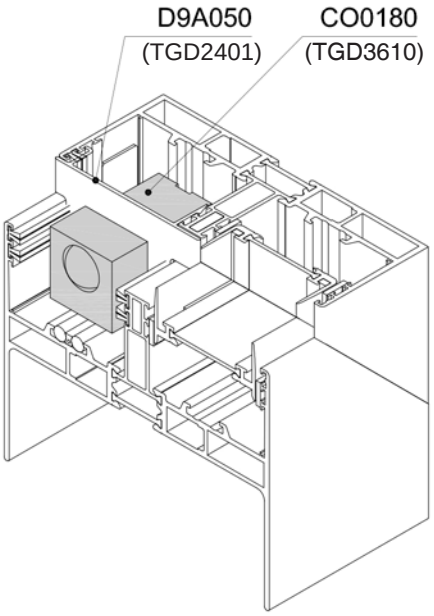

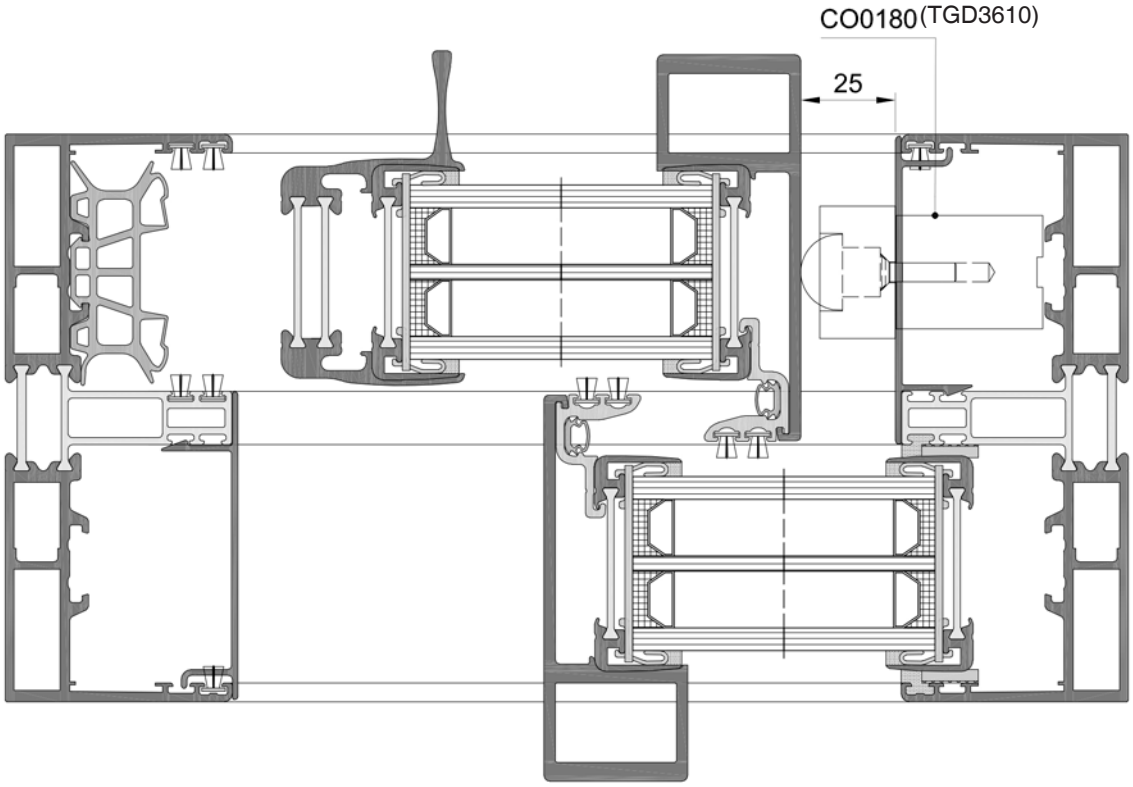

ART2-ASS-1000

BUFFER KIT CO0180 & CO0159 IN 2-RAIL
(TGD3610 & TGD3611)

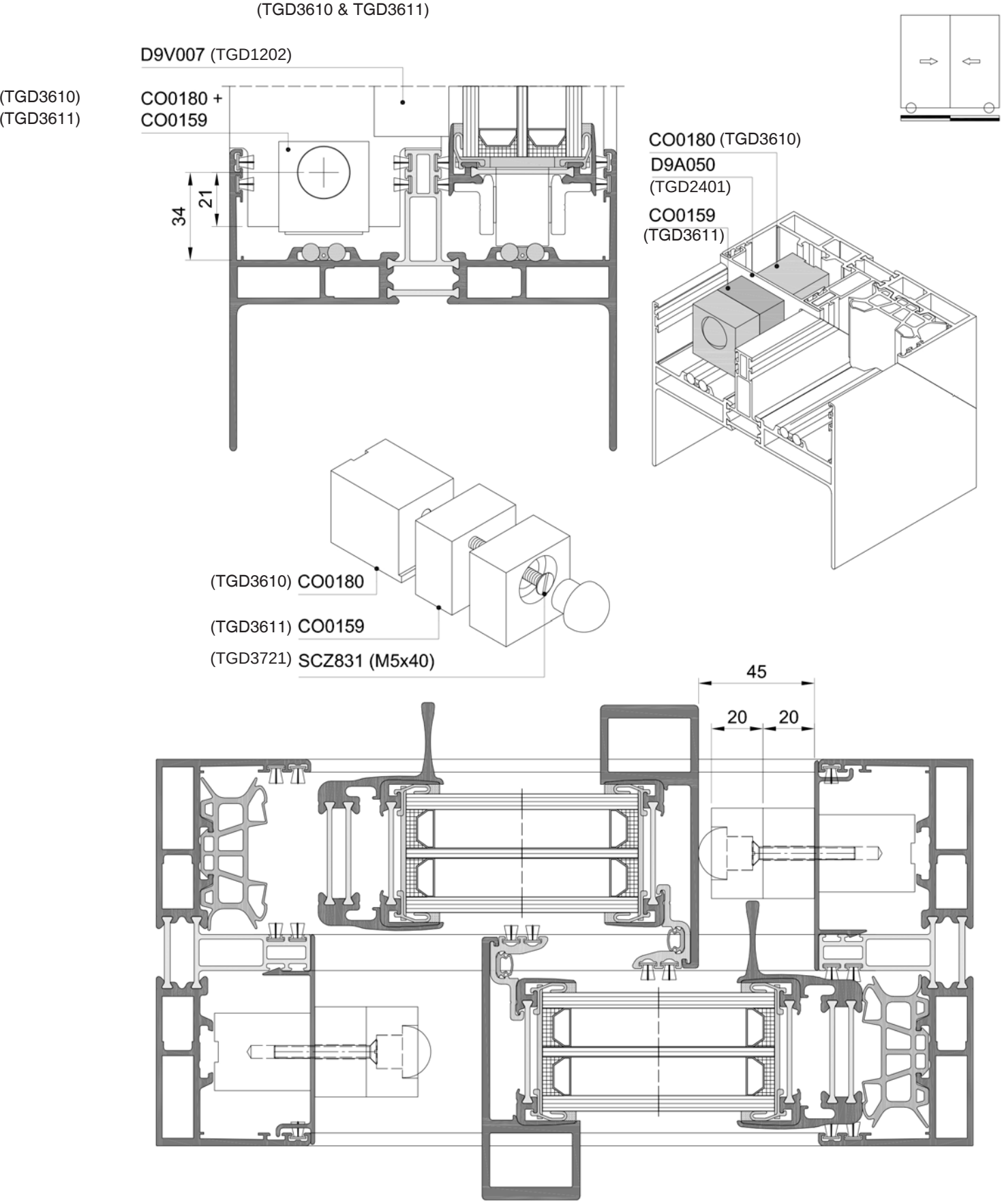

ART2-ASS-1001

Hardware & assembly drawings

Buffers

TECHNAL®

BUFFER KIT CO0201 4-VENTS
(TGD3612)

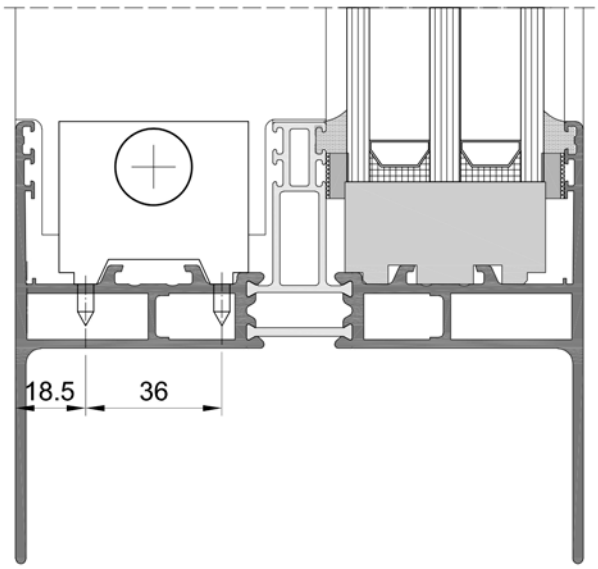

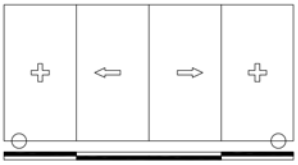

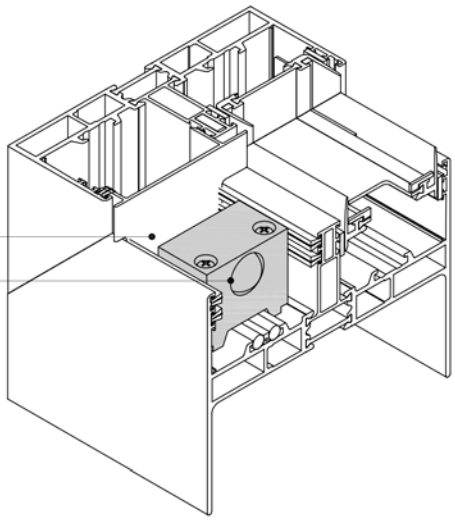

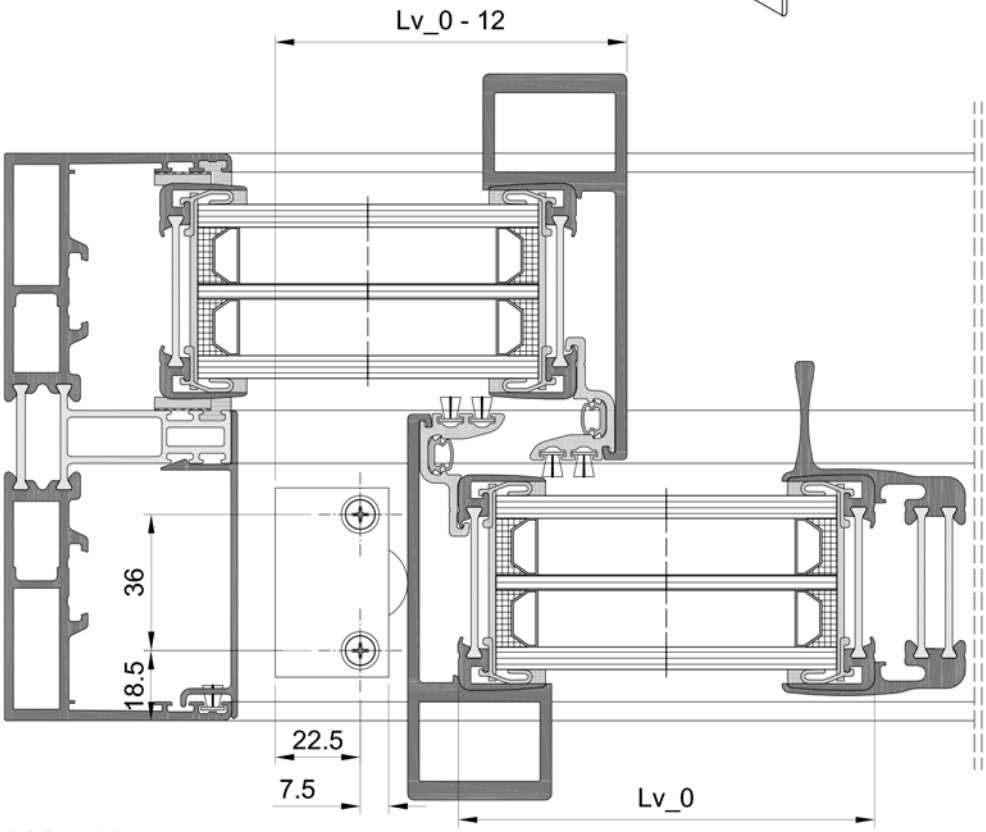

ART2-ASS-1002

BUFFER KIT CO0201 IN 3-RAIL
(TGD3612)

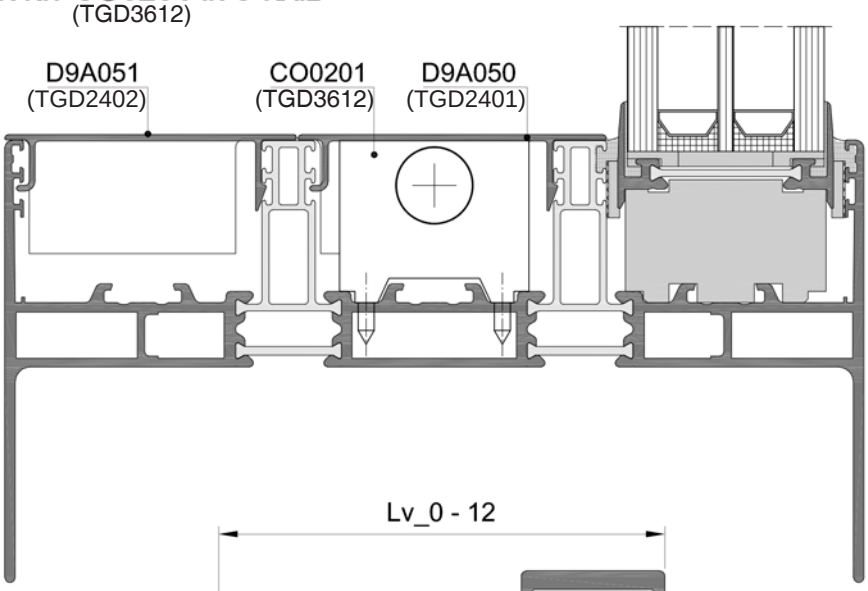

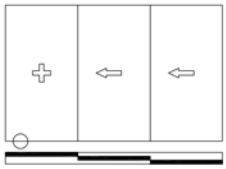

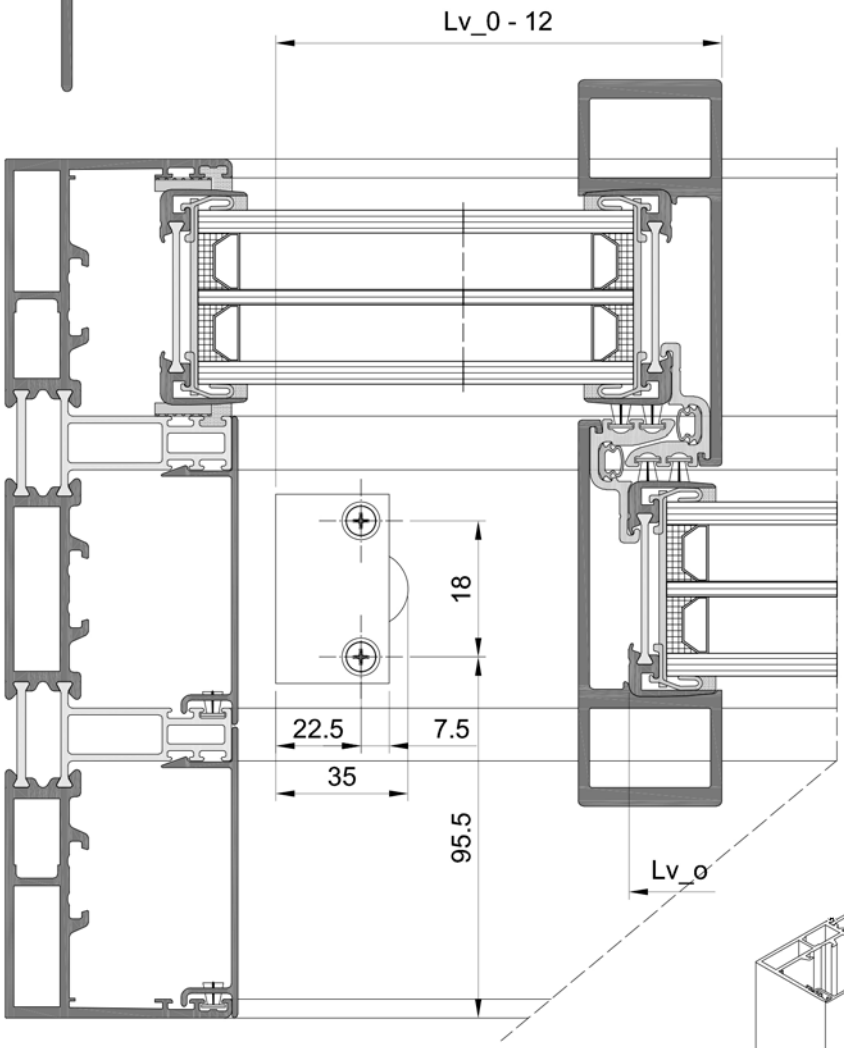

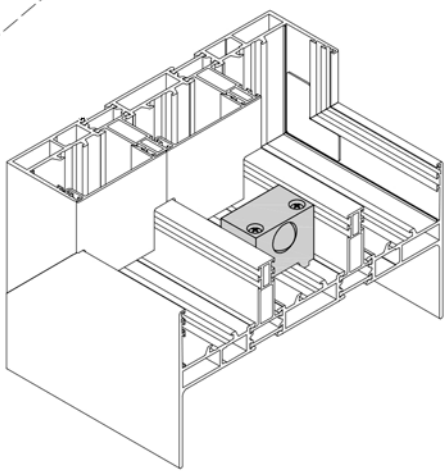

ART2-ASS-1003

Hardware & assembly drawings

Buffers

TECHNAL®

OPERATION ON D9A050 FOR BUFFER CO0180 / CO0180 & CO0159

(TGD2401) (TGD3610 / TGD3610 & TGD3611)

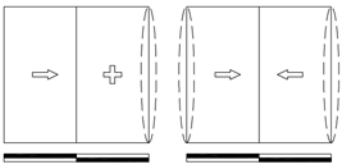

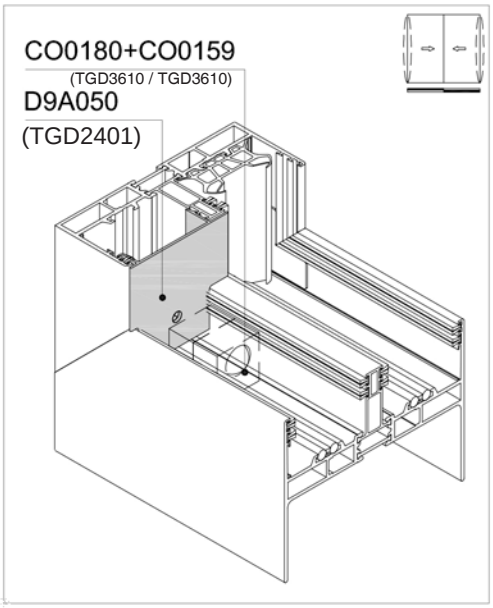

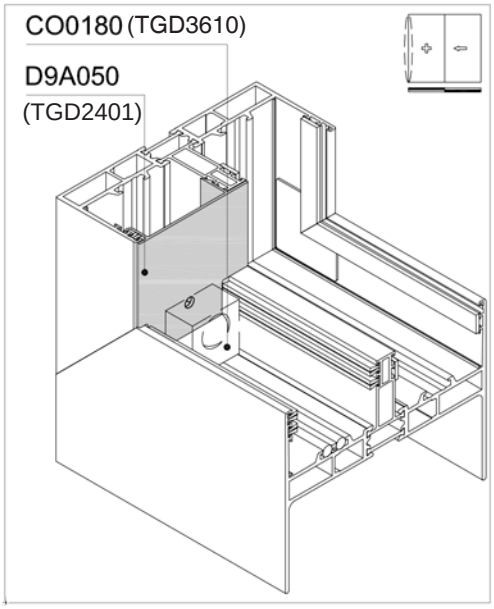

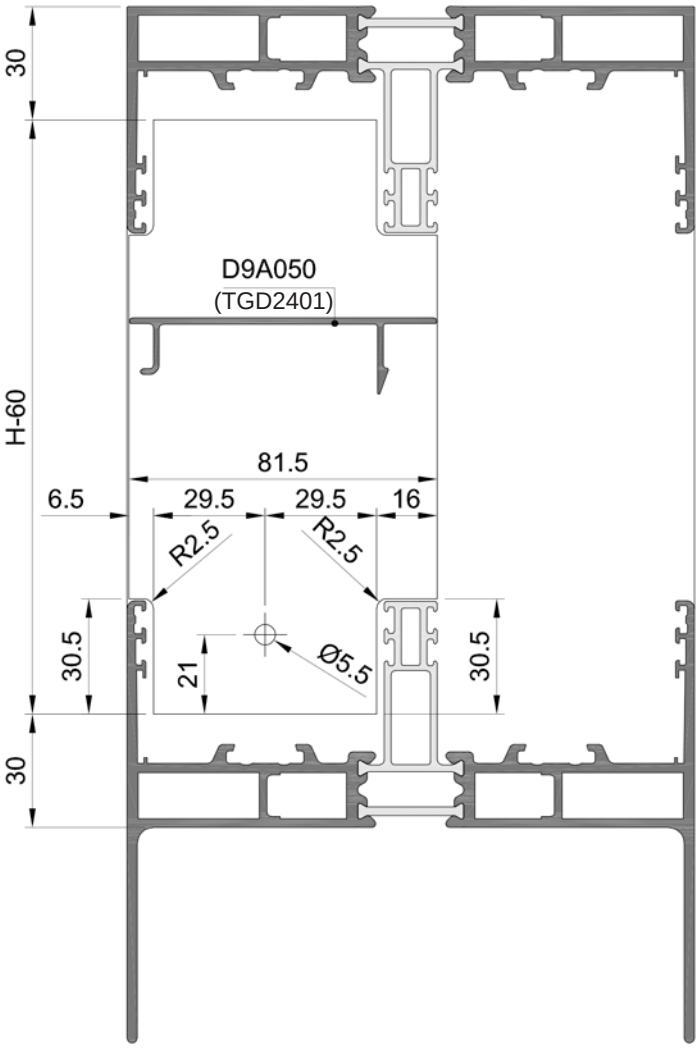

ART2-ASS-1004

OPERATION ON D9A050 FOR BUFFER CO0201 (TGD3612)

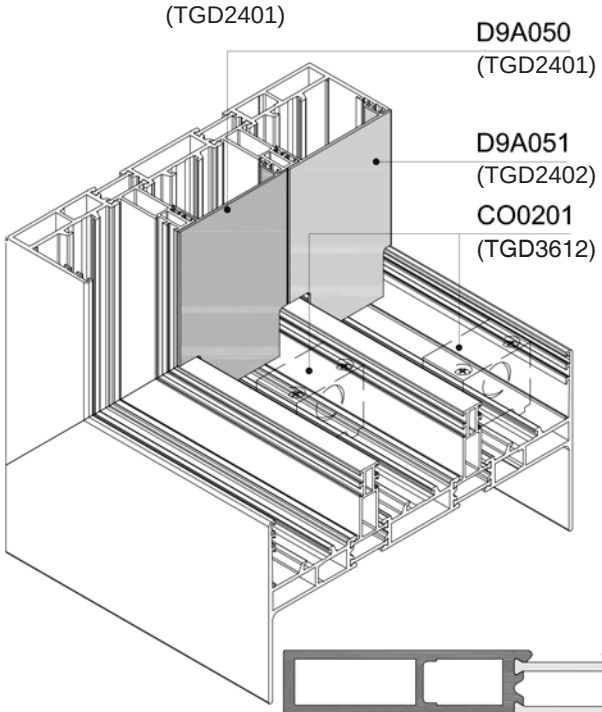

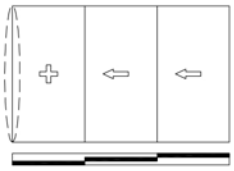

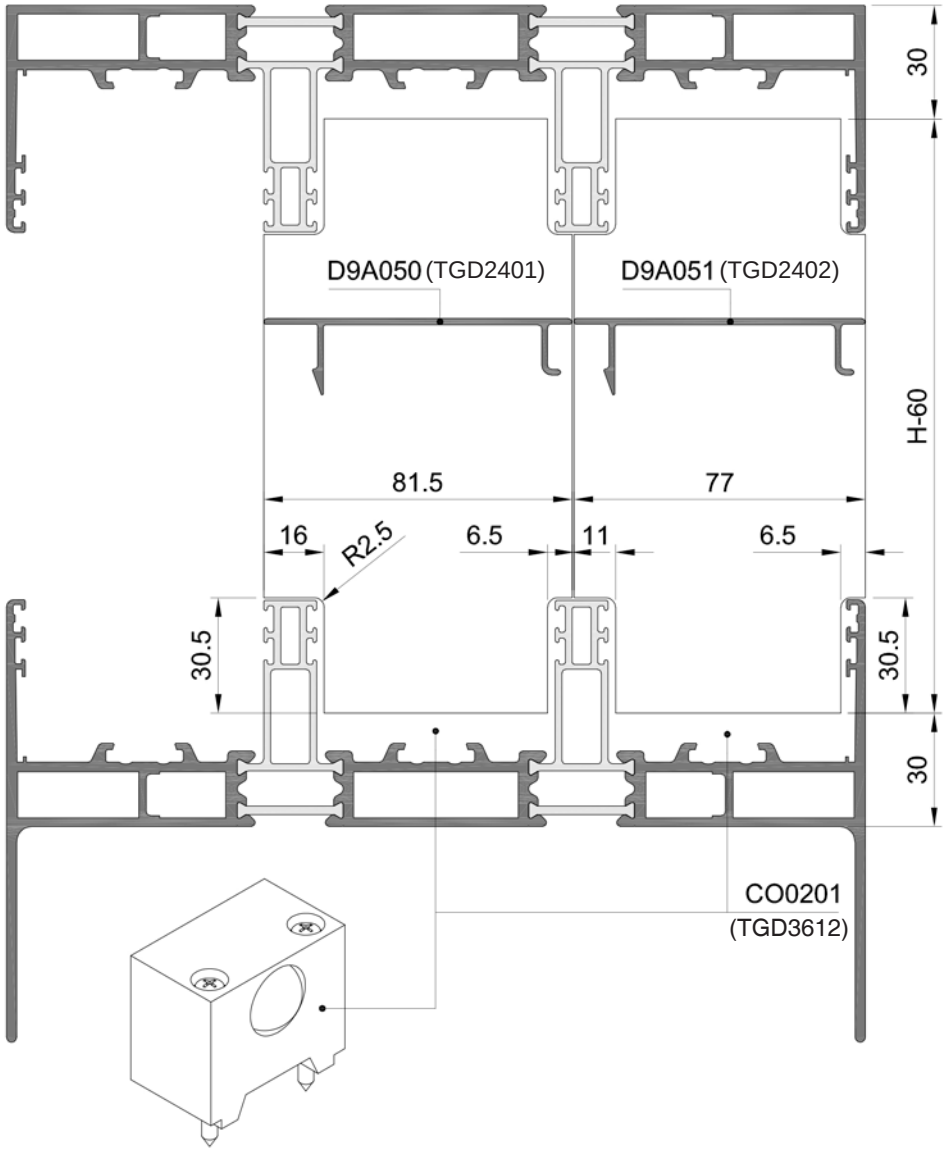

ART2-ASS-1005

Hardware & assembly drawings

Corner profile

GENERAL VIEW CORNER SOLUTION 90°

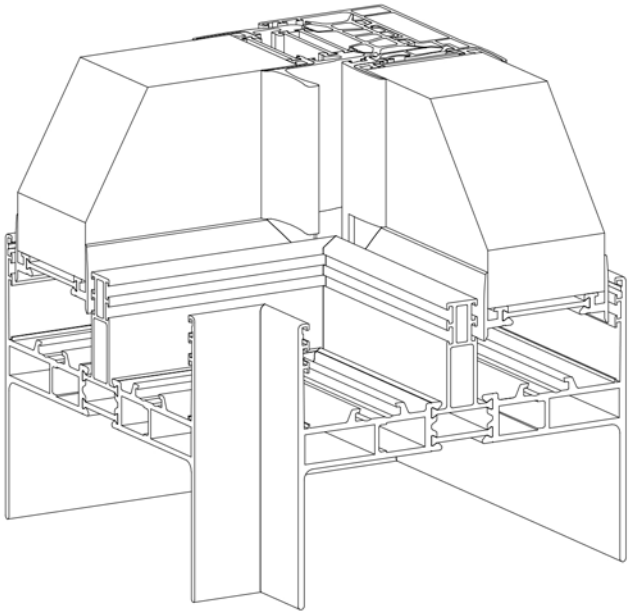

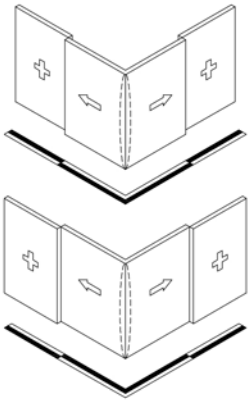

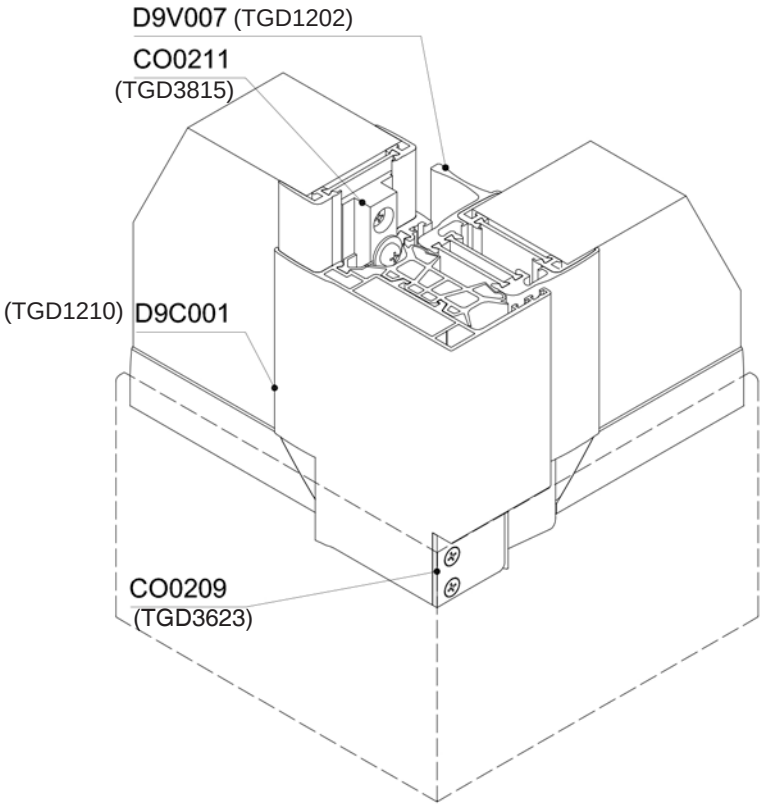

ART2-ASS-1101

CORNER PROFILE: ASSEMBLY OF D9V005 (TGD1201)

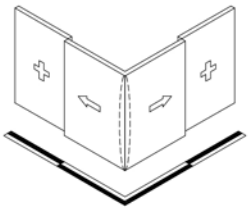

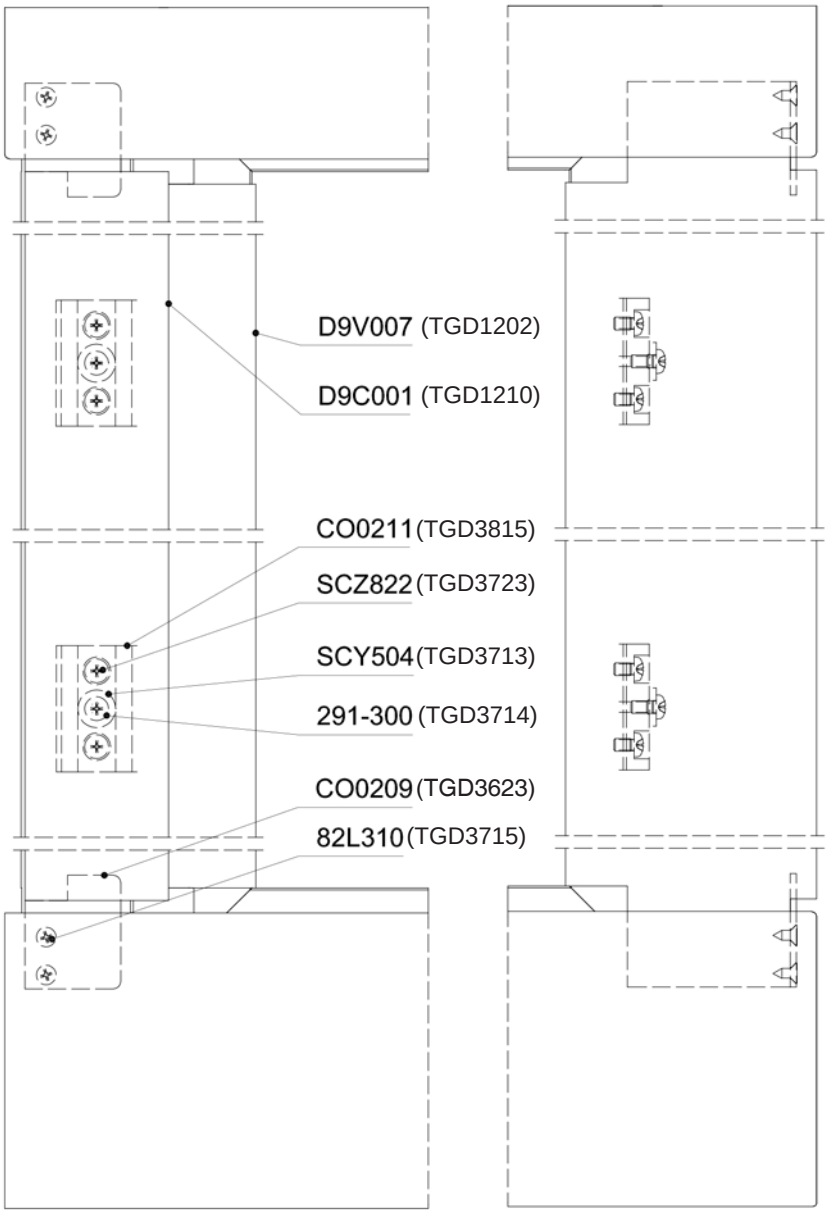

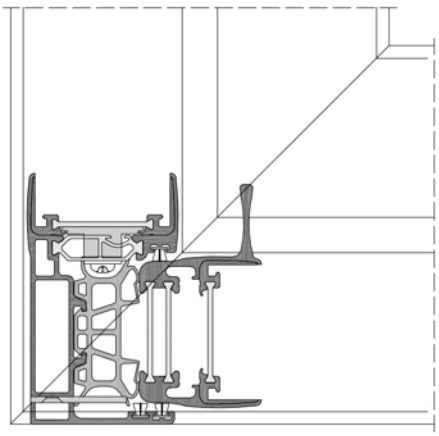

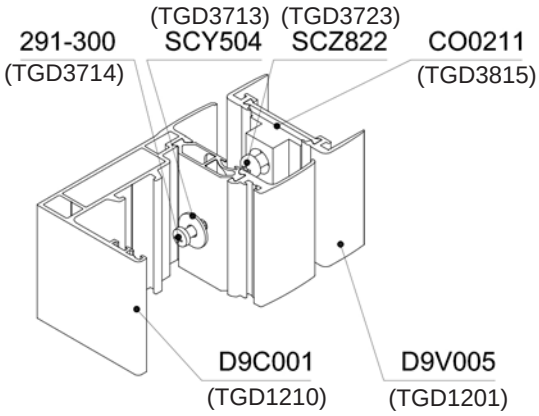

ART2-ASS-1102

Hardware & assembly drawings

Corner profile

TECHNAL®

CORNER PROFILE: OPERATION ON D9C001

(TGD1210)

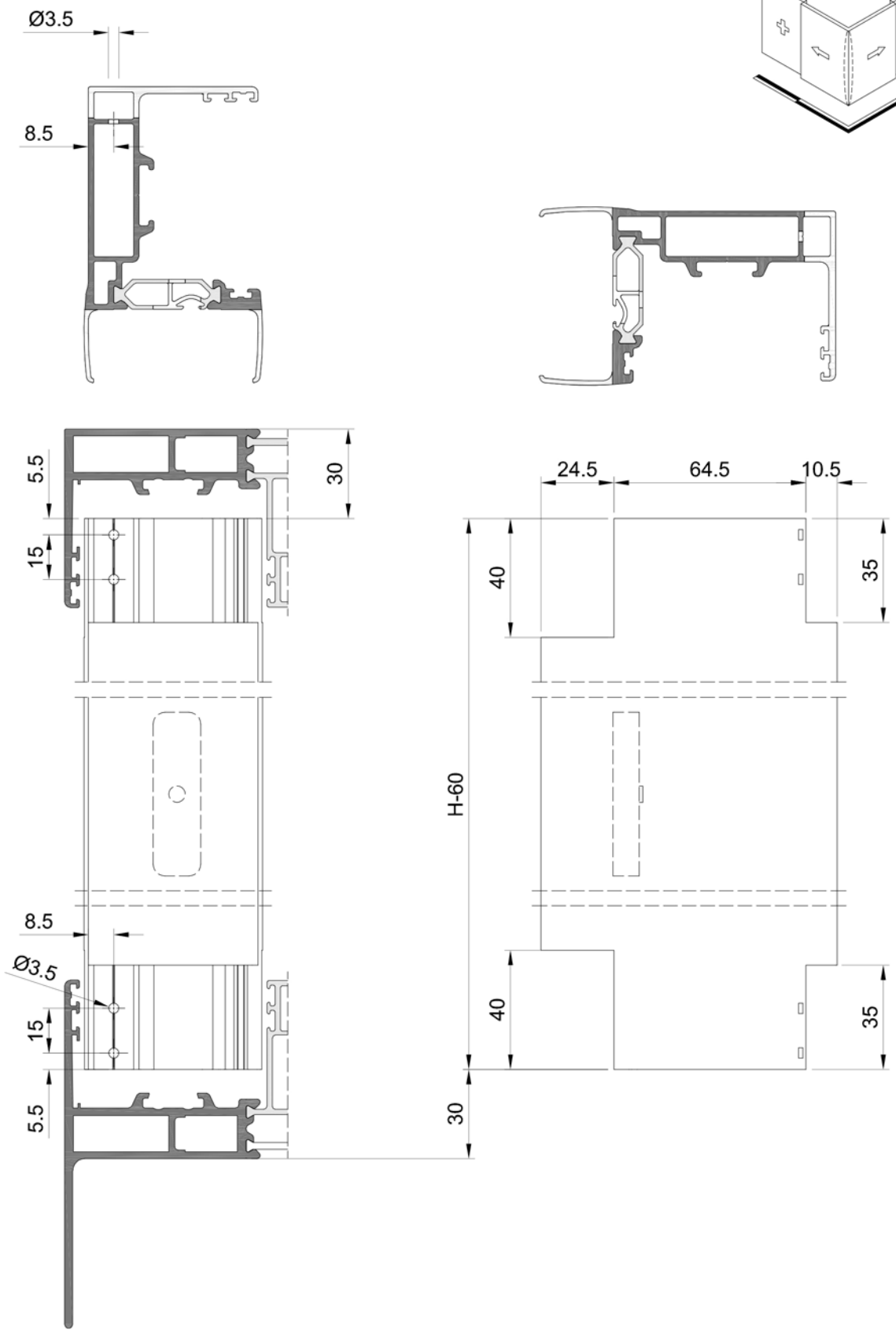

ART2-ASS-1103

POSITION CO0211, OPERATION D9C001 AND D9V005

(TGD3815) (TGD1210) (TGD1201)

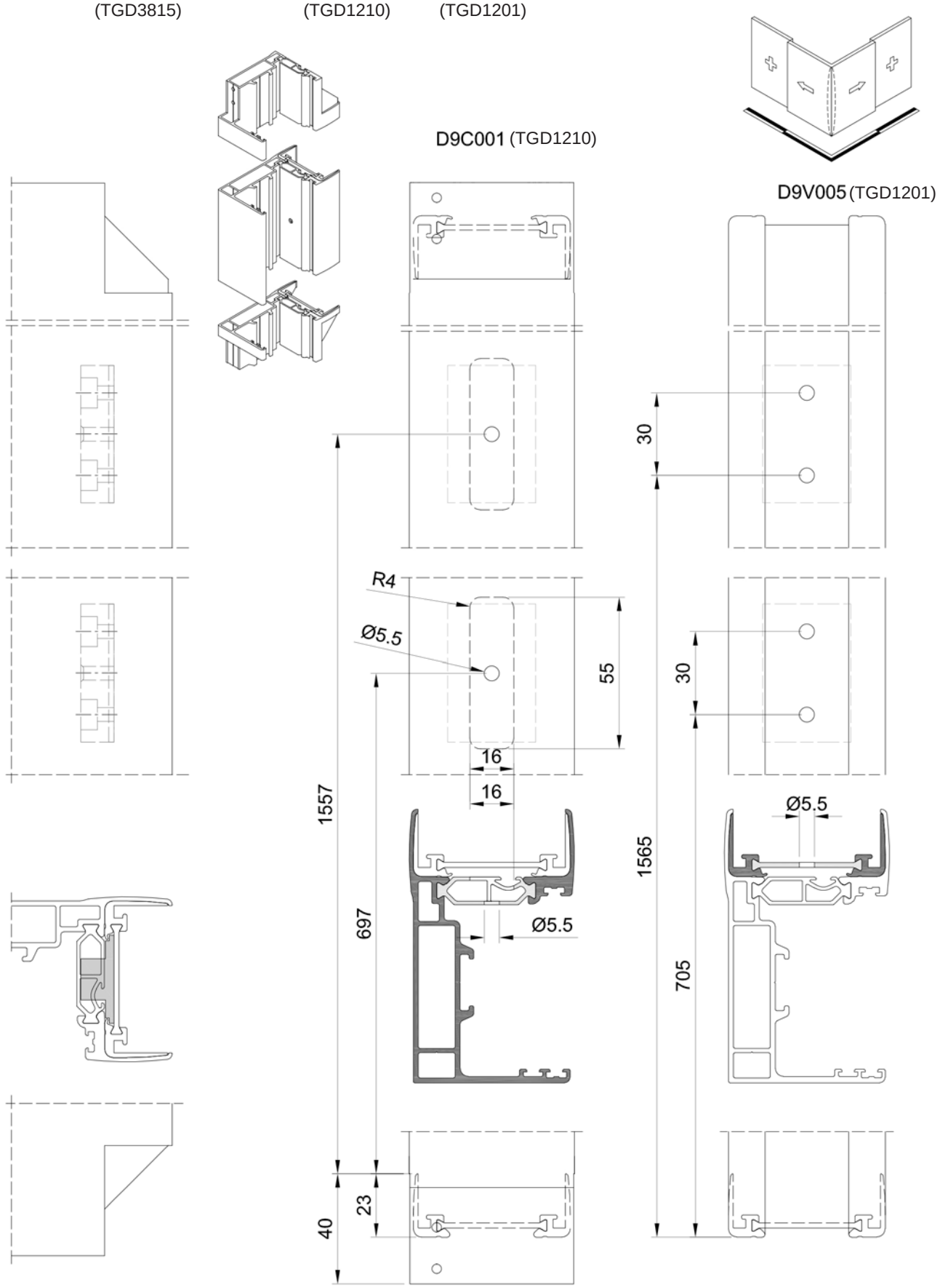

ART2-ASS-1104

Hardware & assembly drawings

Transom

TECHNAL®

OPERATION ON D9T001/D8C005/D8A013

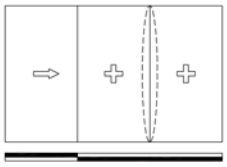

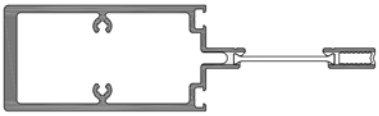

D9T001

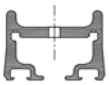

D8C005

D8A013

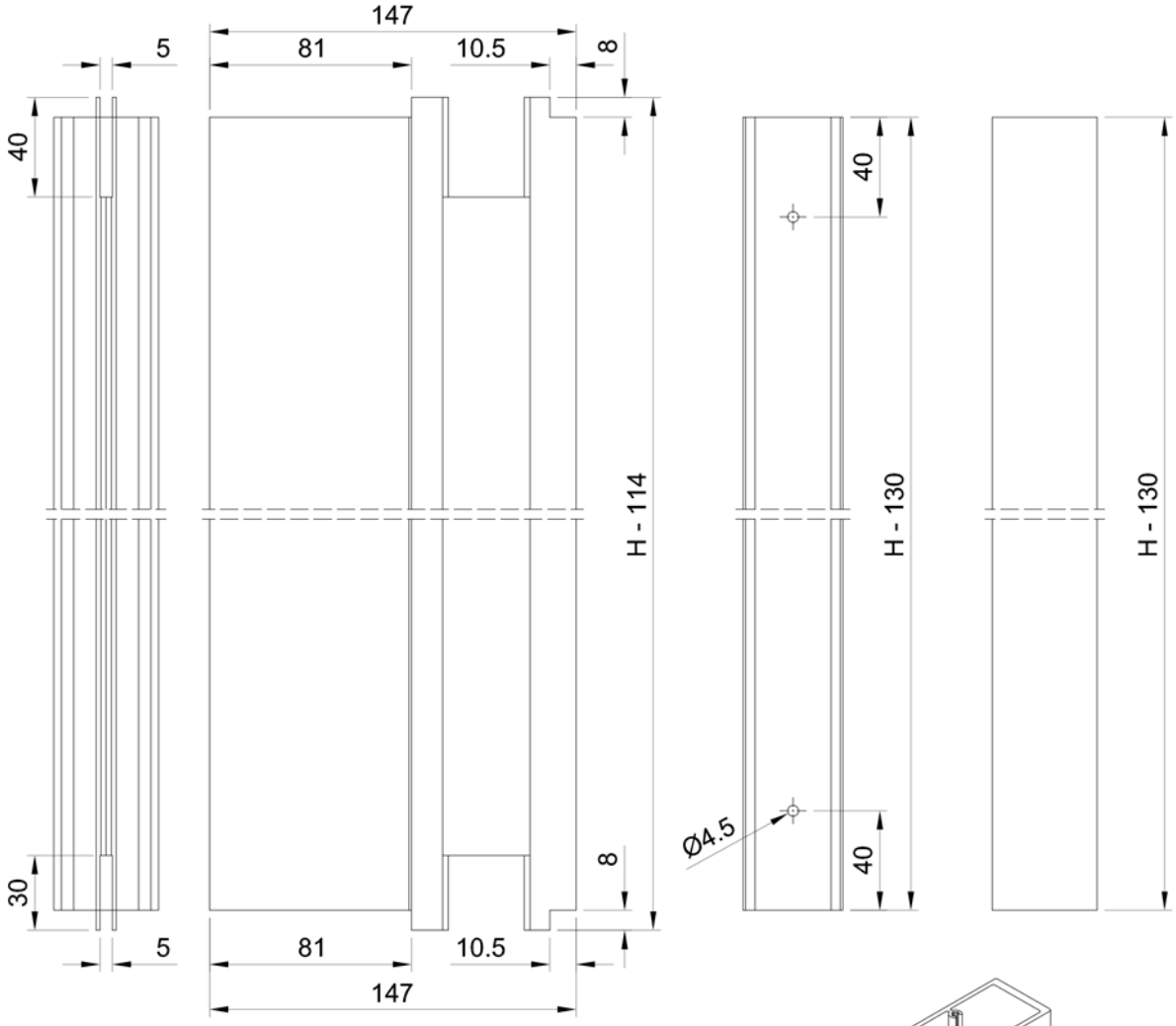

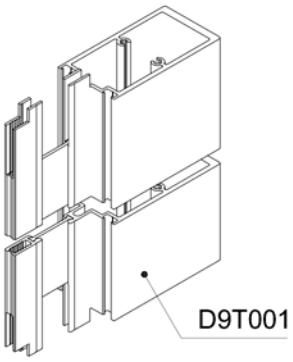

ART1-ASS-1110

ASSEMBLY OF D9T001 - PART 1

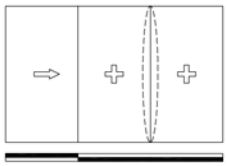

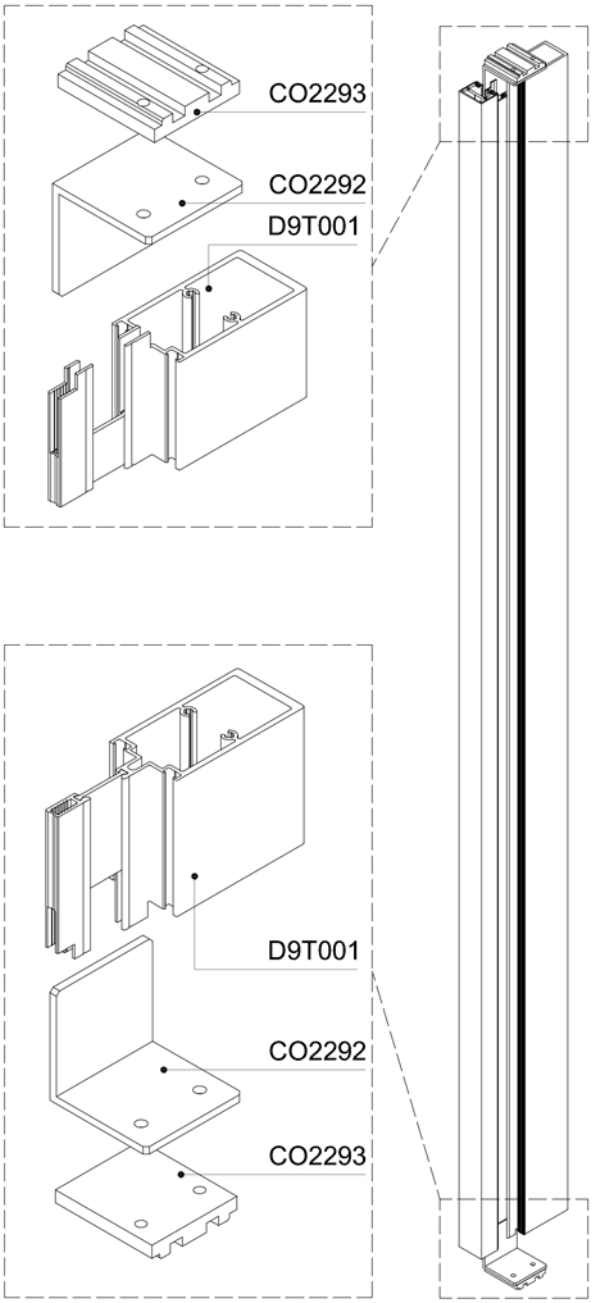

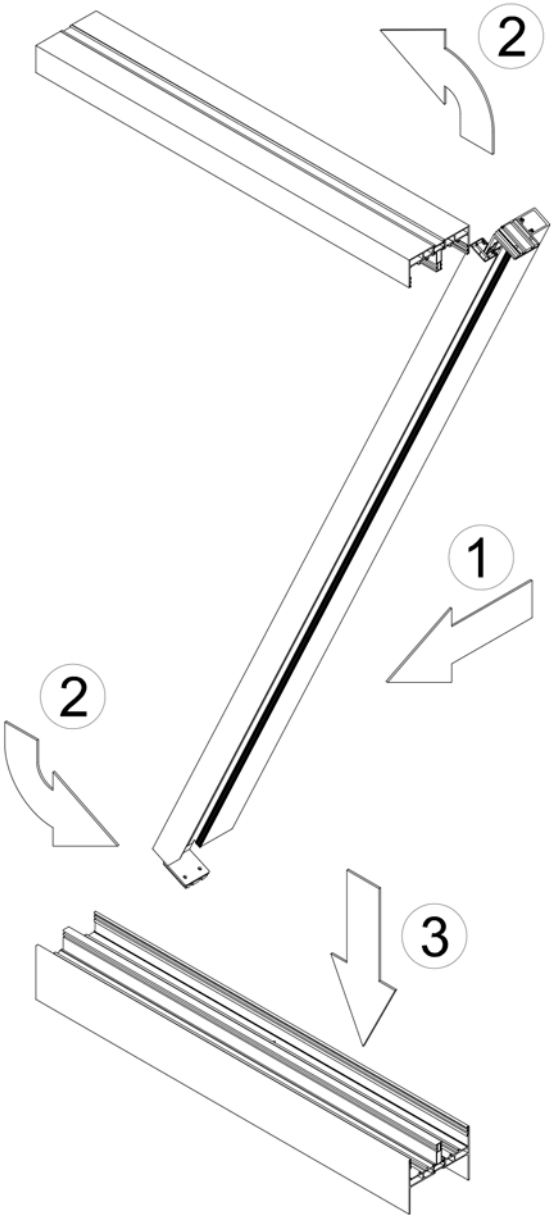

ART1-ASS-1111

Hardware & assembly drawings

Transom

TECHNAL®

ASSEMBLY OF D9T001 - PART 2

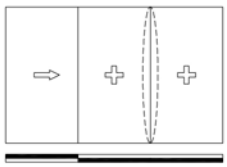

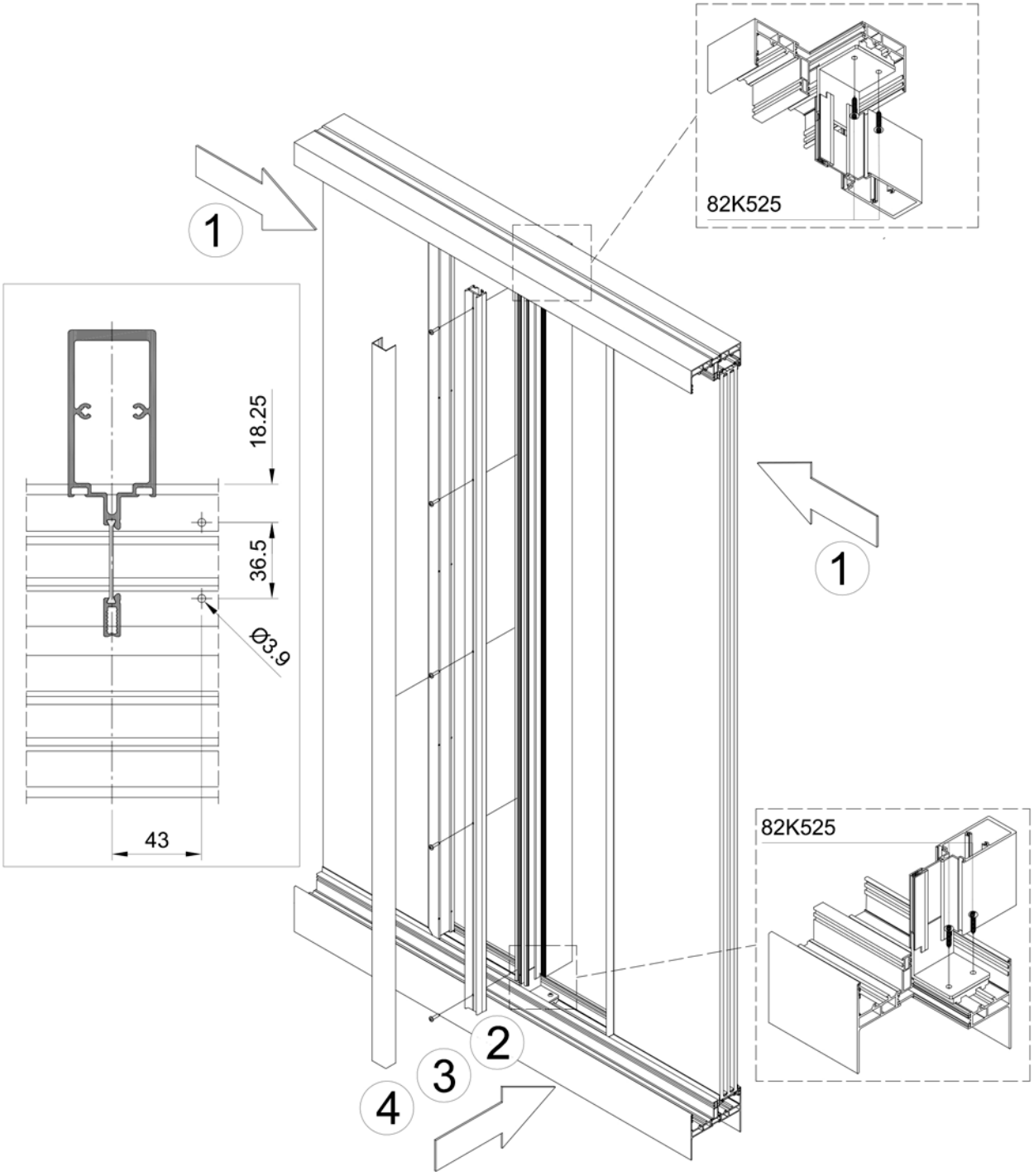

ART2-ASS-1112

ASSEMBLY D8A002 AND D8A003 ON FRAME

(TGD2500) (TGD2501)

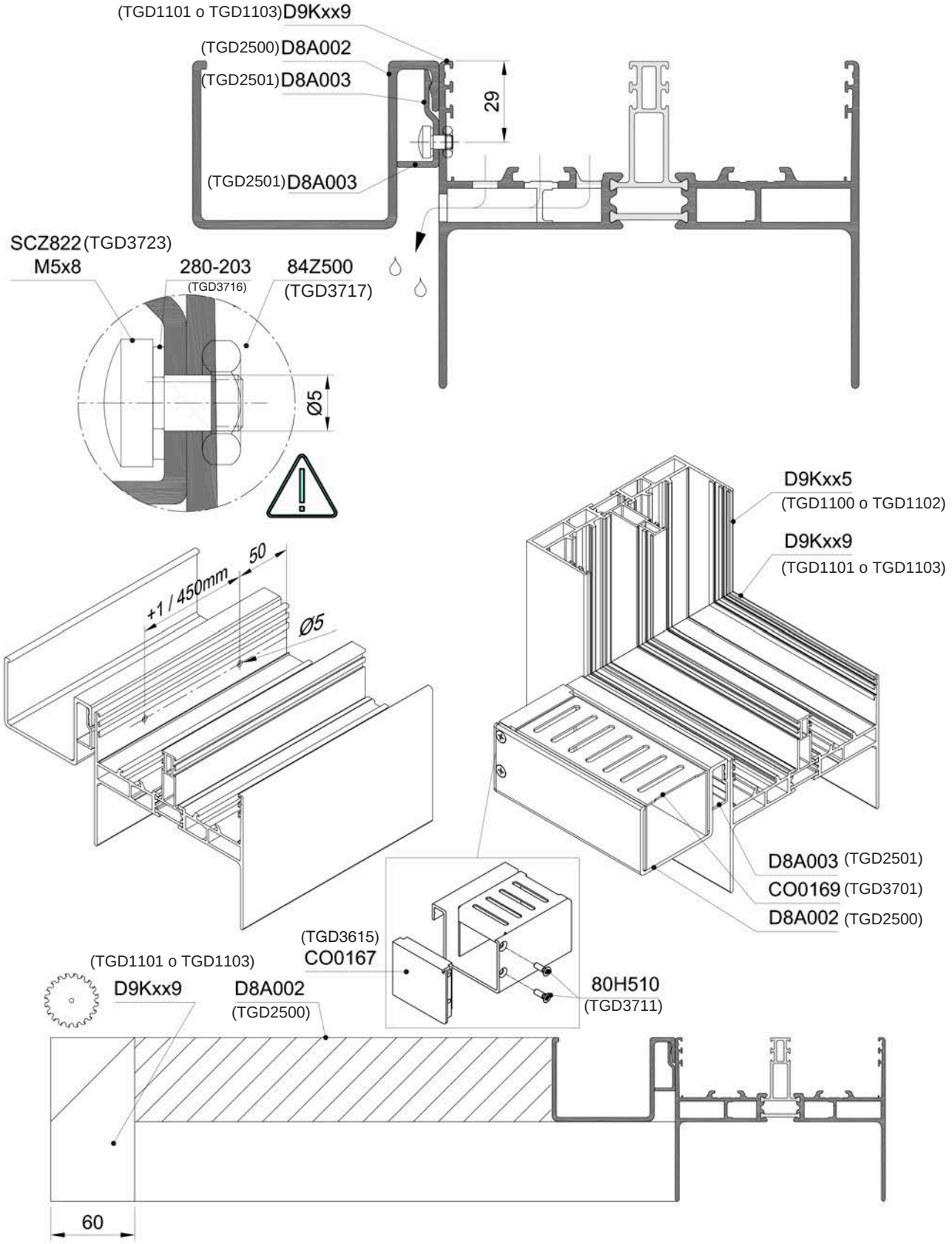

ART2-ASS-1201

Screw may not protrude.

Hardware & assembly drawings

Gutters

TECHNAL®

USE OF CO0167 / CO0168

(TGD3615 / TGD3616)

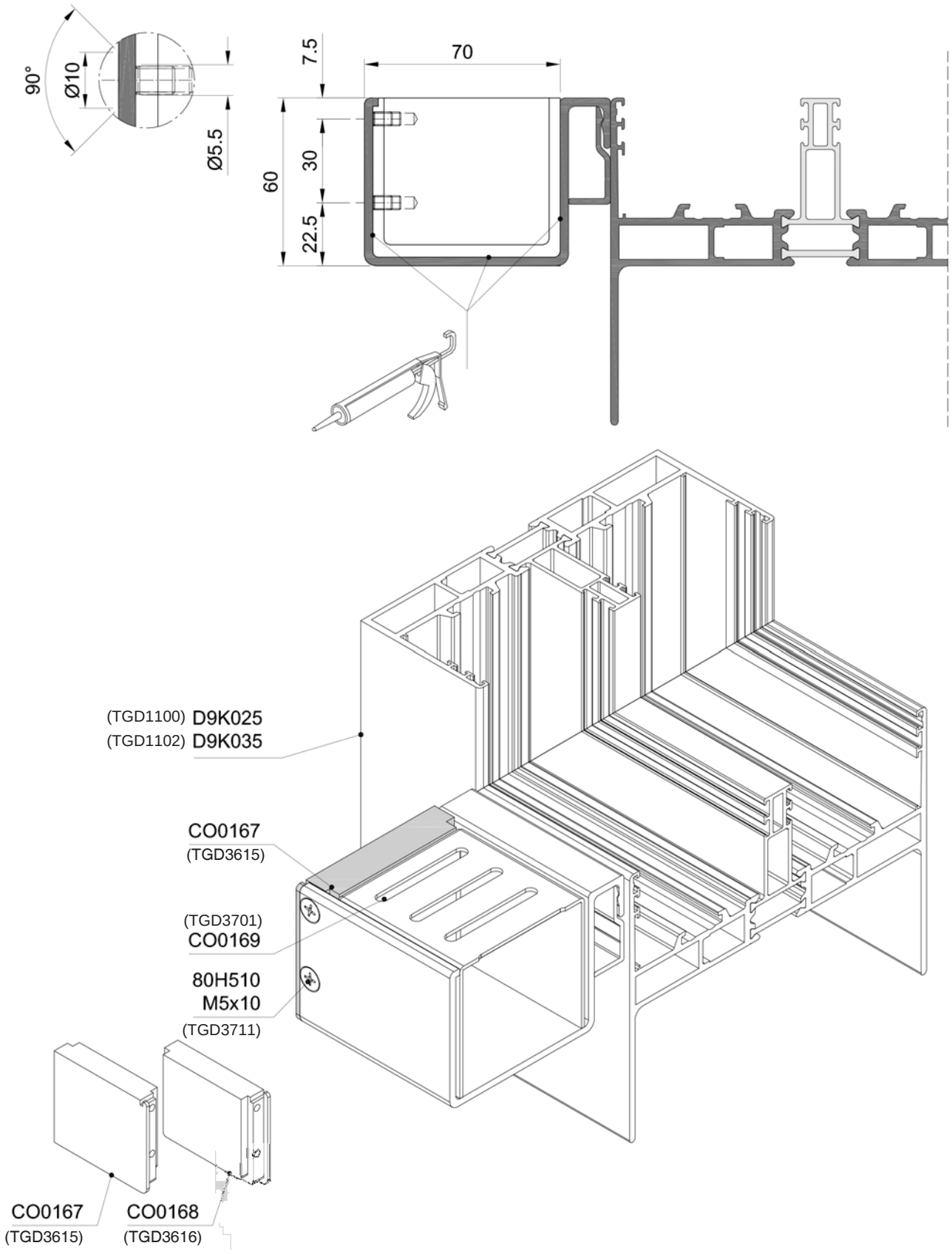

ART2-ASS-1200

ASSEMBLY D8A014 AND D8A003 ON FRAME
(TGD2502) (TGD2501)

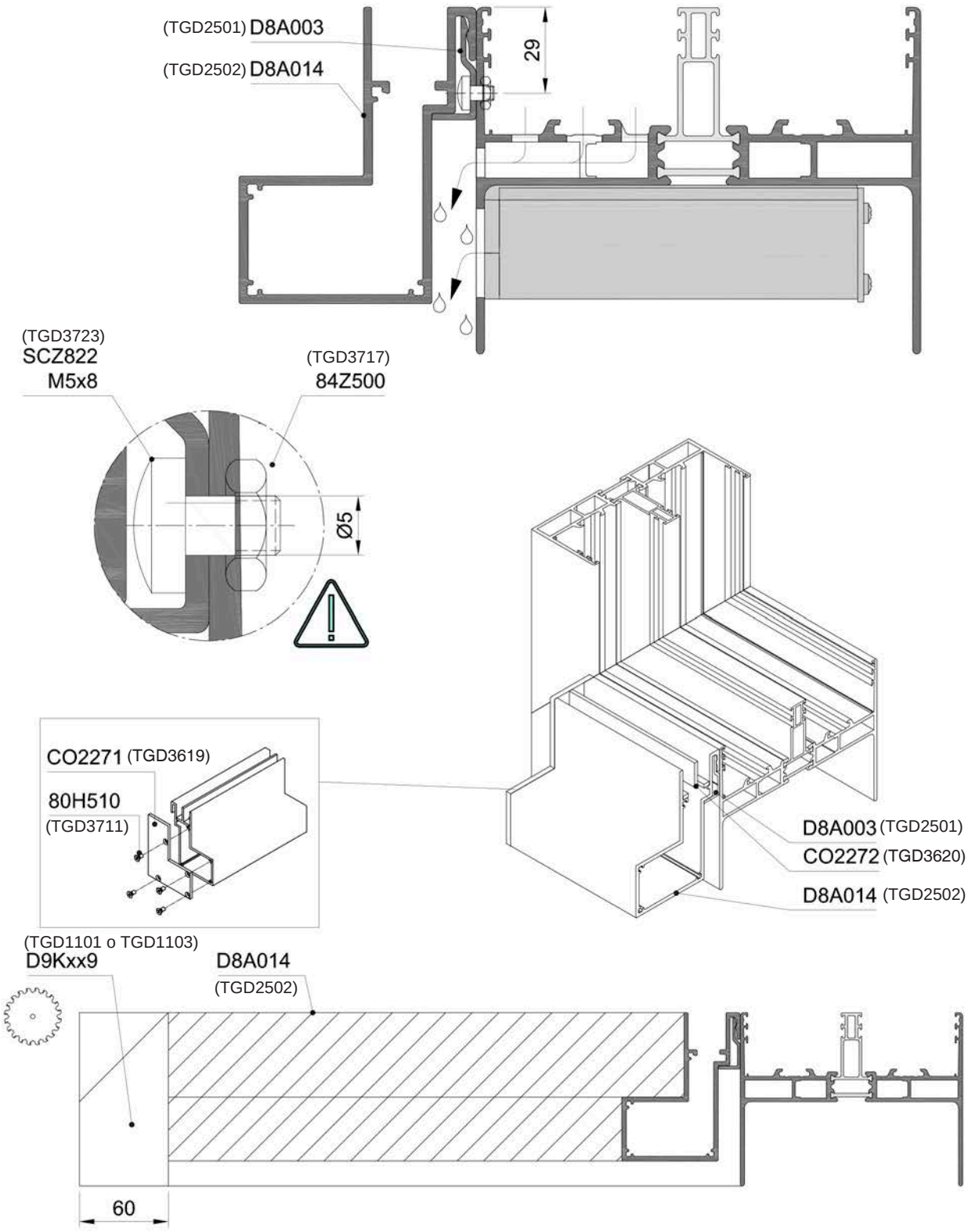

ART2-ASS-1202
Screw may nog protrude.

Hardware & assembly drawings

Gutters

DRAINAGE OF GUTTER PROFILES

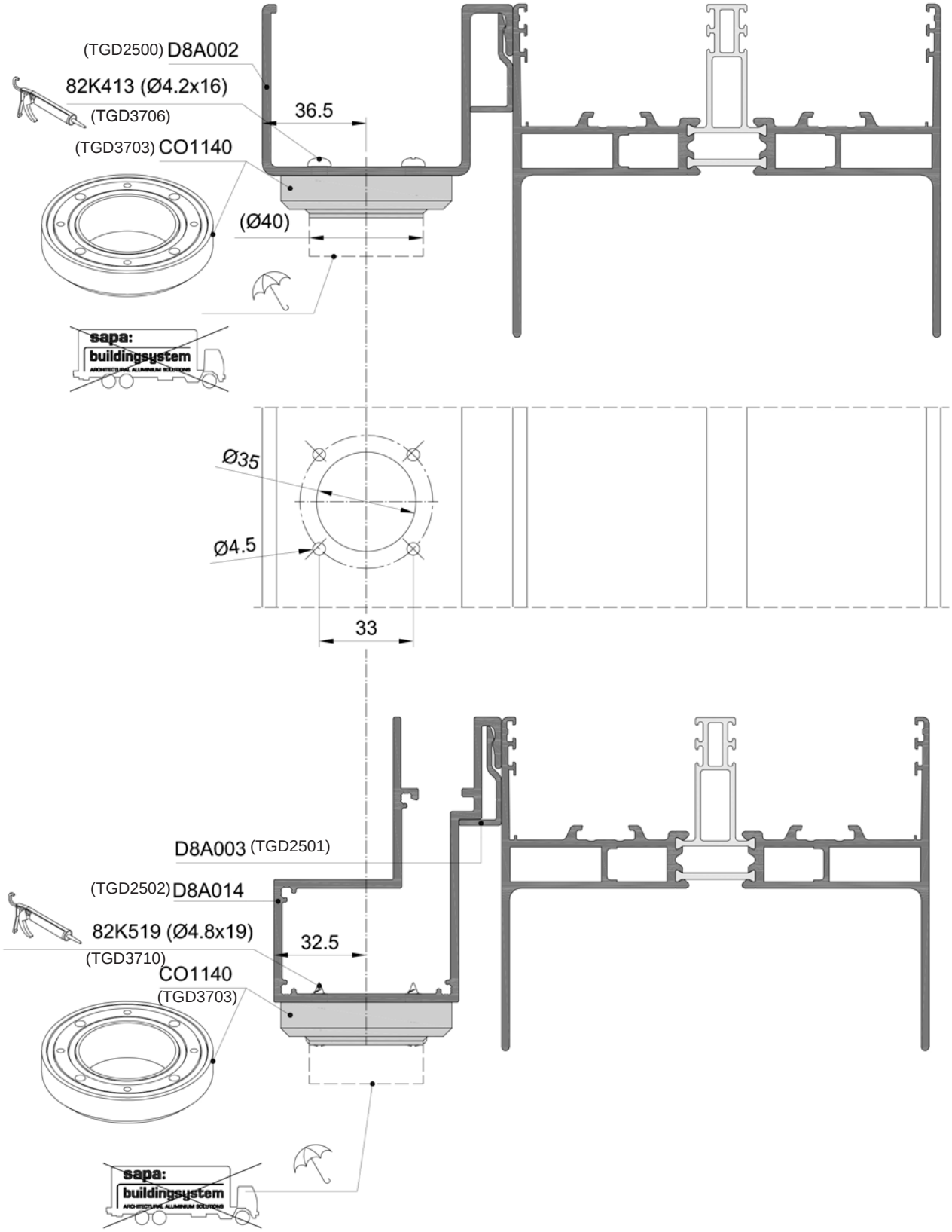

ART2-ASS-1203

OVERVIEW GUTTER CONNECTIONS

D8A002 (TGD2500)

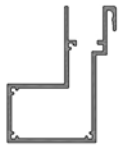

D8A014 (TGD2502)

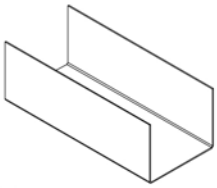

CO1144 (TGD3617)

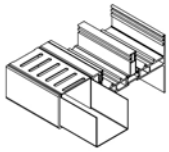

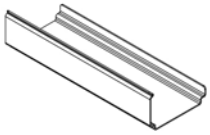

CO2273 (TGD3621)

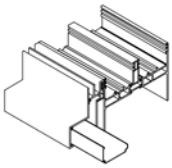

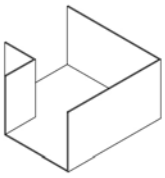

CO0157
(TGD3618)

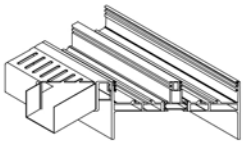

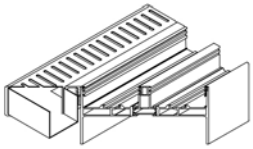

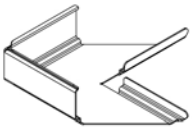

CO2274
(TGD3622)

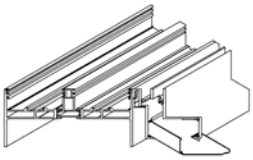

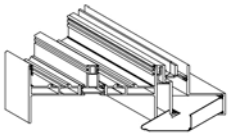

CO0167 (TGD3615)

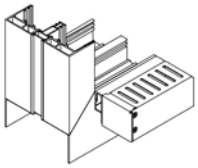

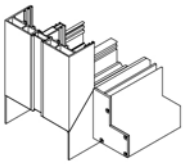

CO0168 (TGD3616)

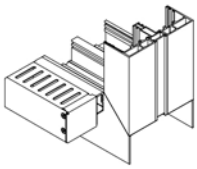

CO2271
(TGD3619)

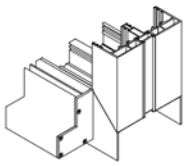

ART2-ASS-1204

Hardware & assembly drawings

Hardware assembly

TECHNAL®

CUT OUT FOR ROLLERS

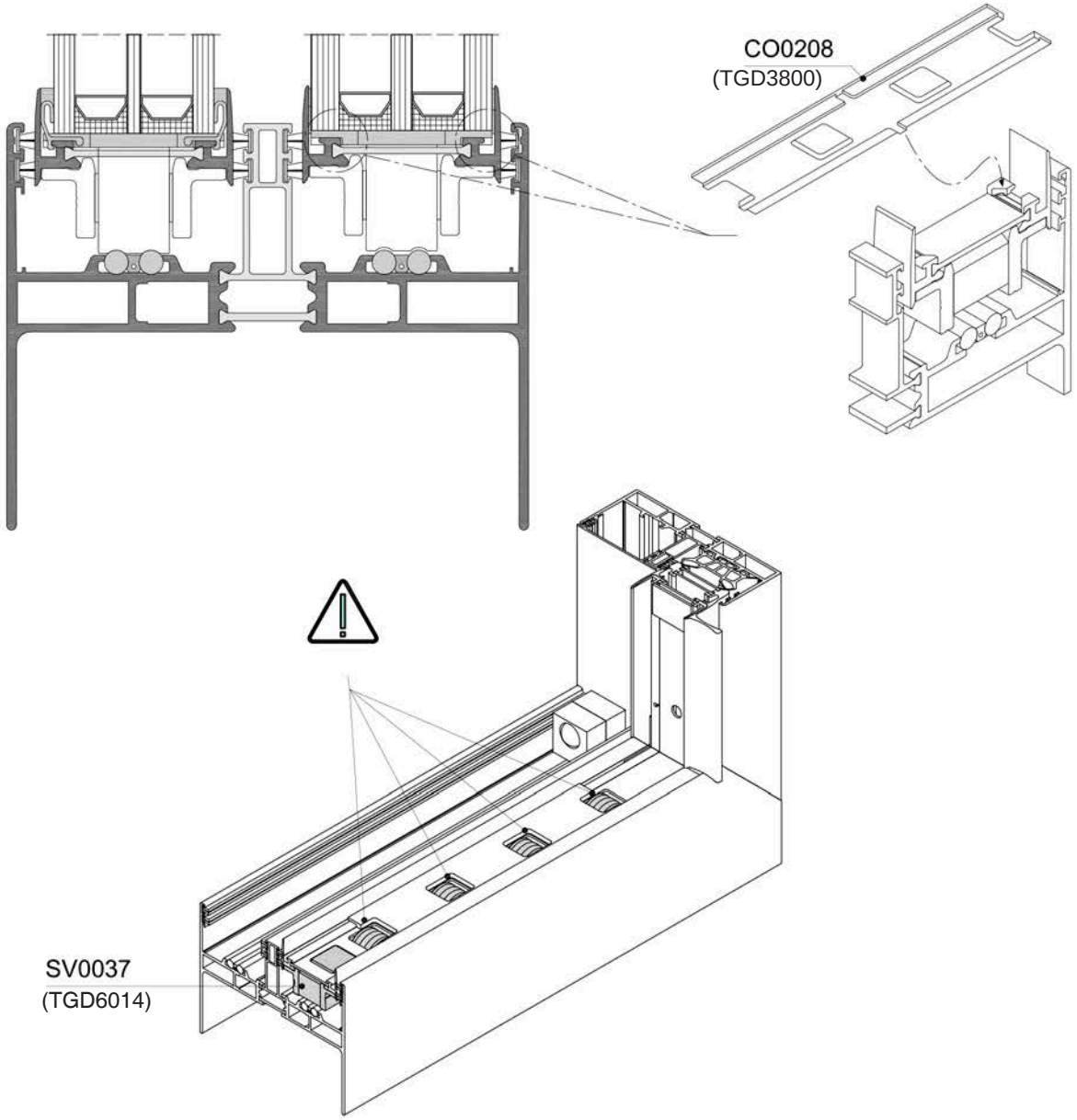

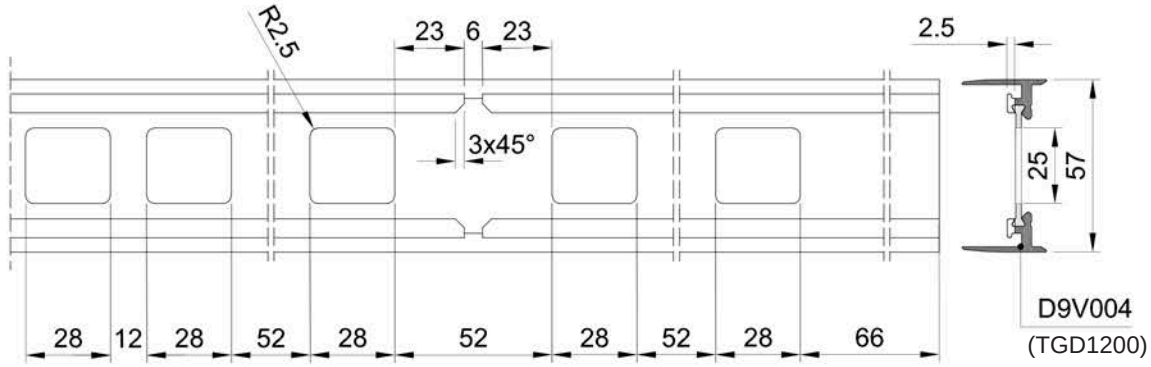

ART2-ASS-1401

Cut out for rollers should be kept free of silicone.

ASSEMBLY RAIL CO1199 (TGD4003)

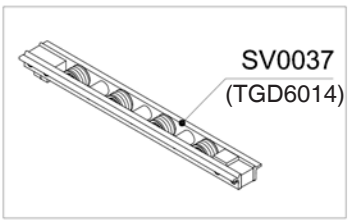

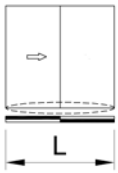

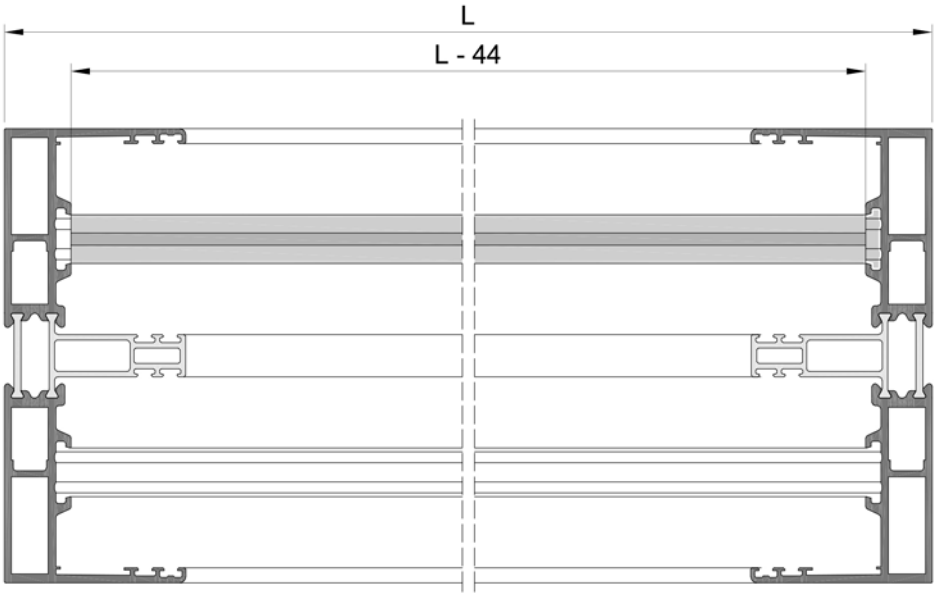

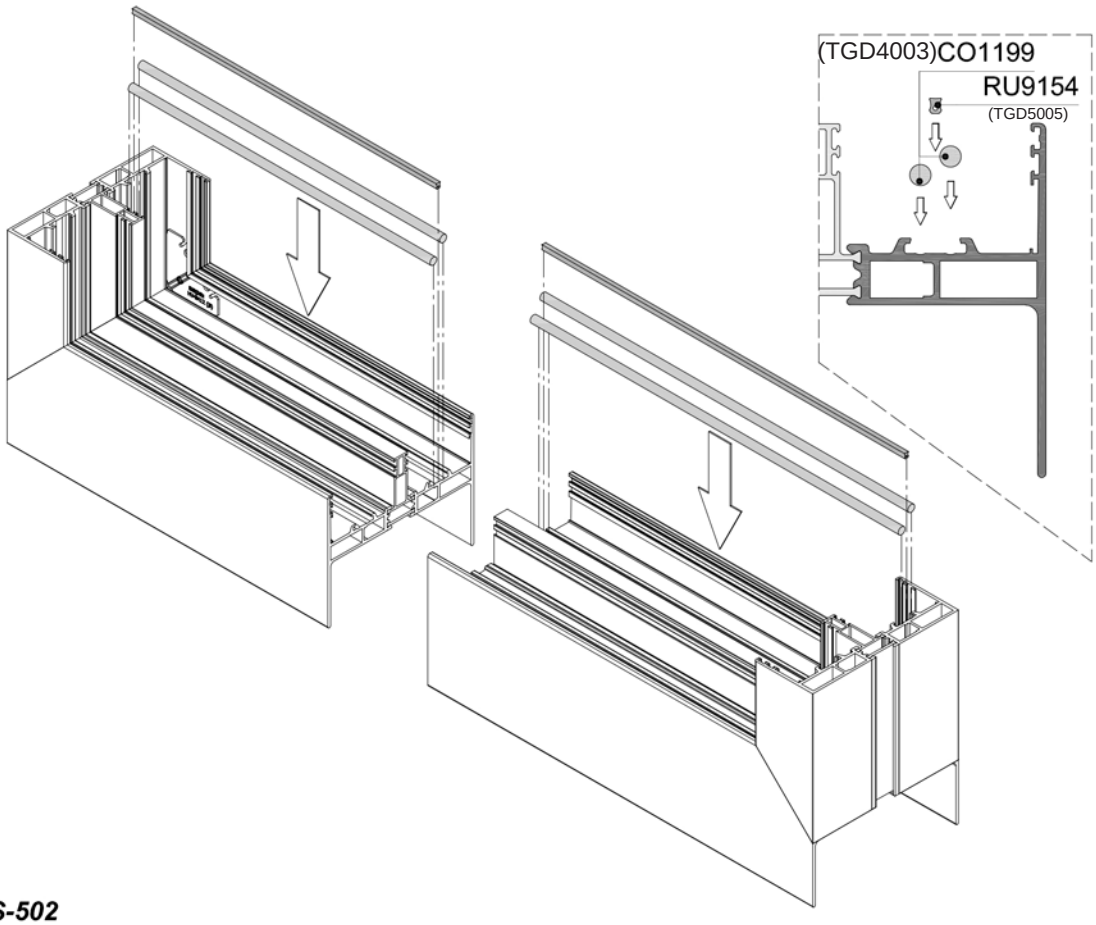

ART2-ASS-502

Hardware & assembly drawings

Hardware assembly

TECHNAL®

ASSEMBLY MULTIPOINT LOCK

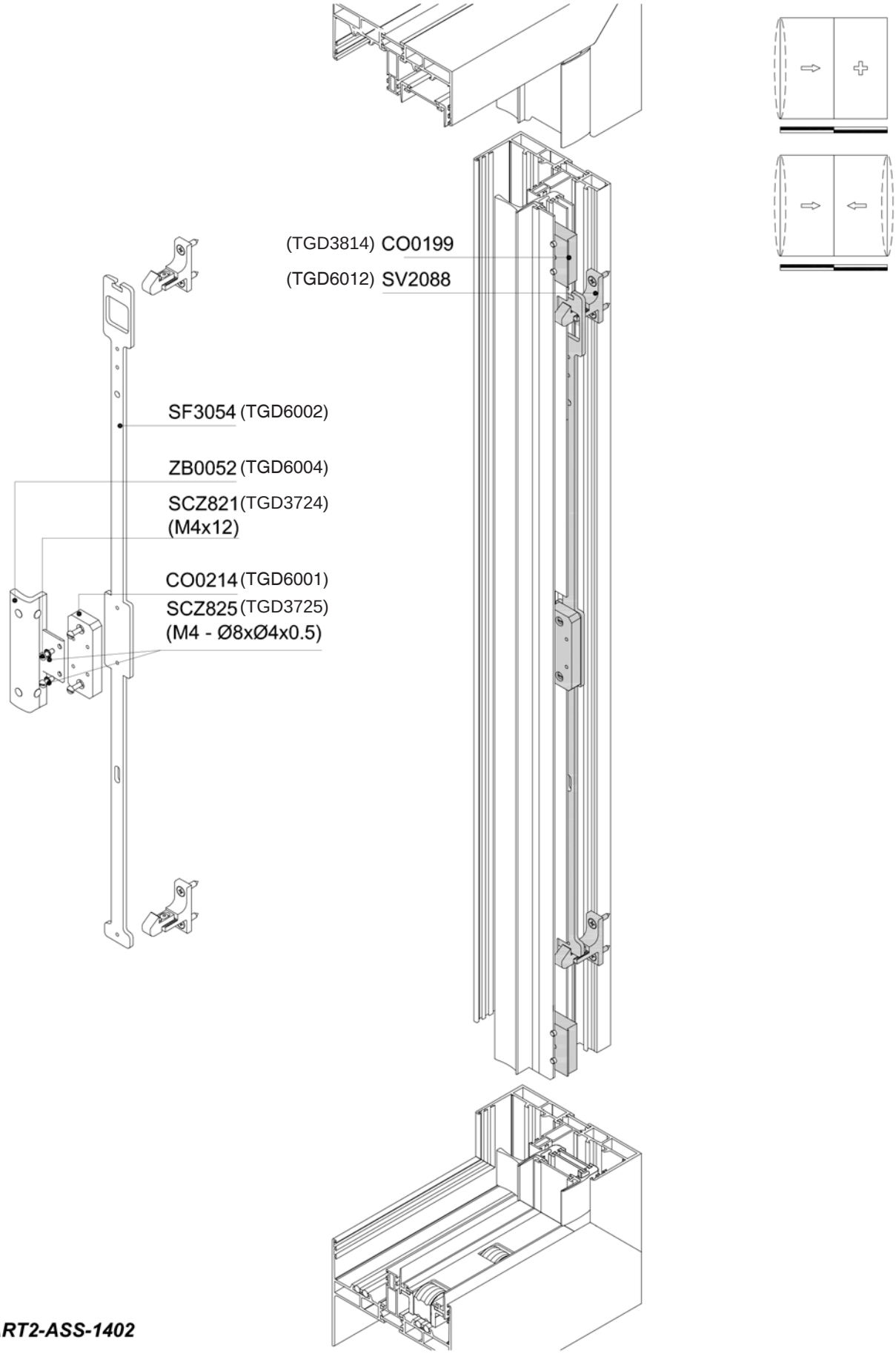

ART2-ASS-1402

ASSEMBLY MULTIPOINT LOCK

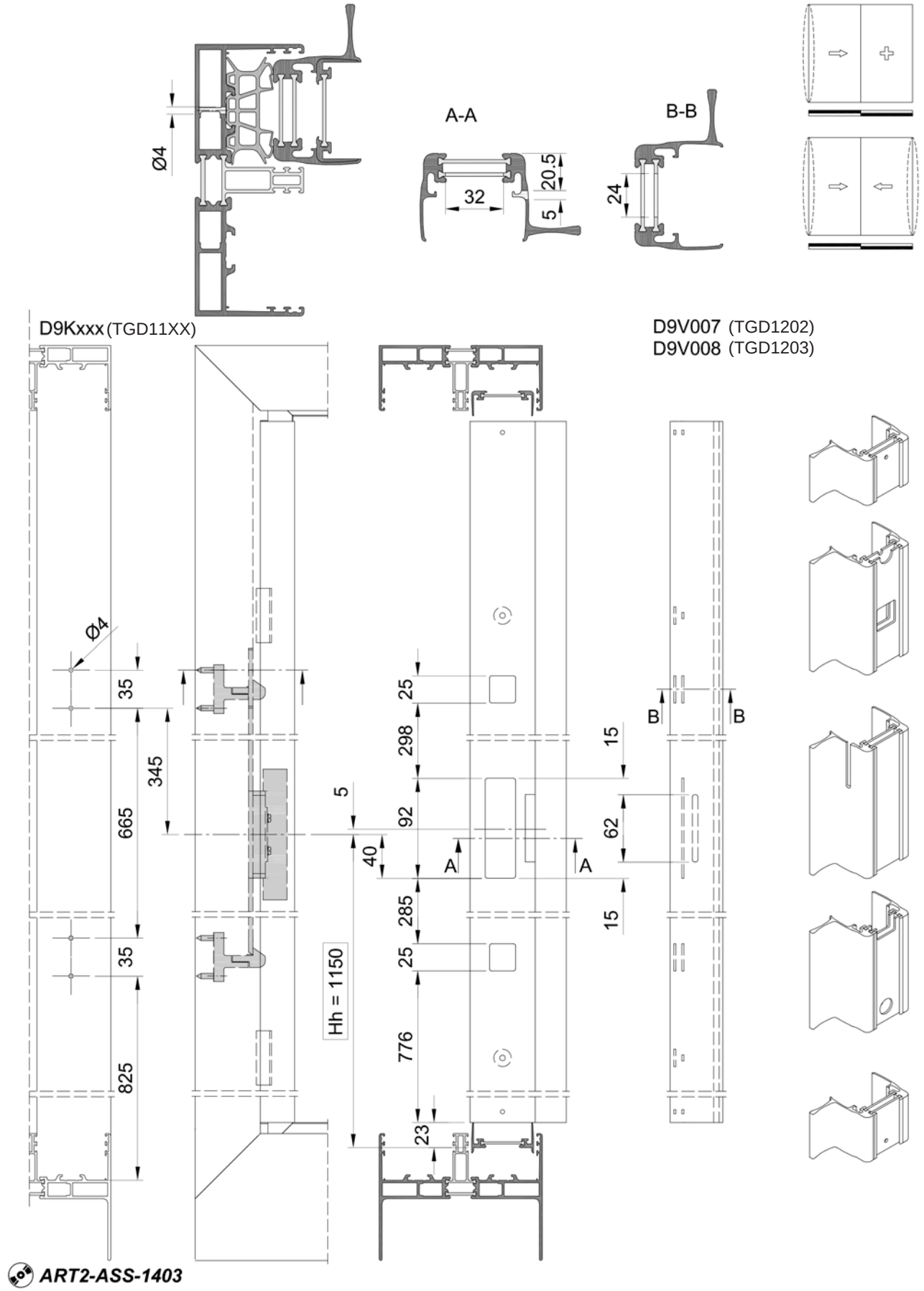

ART2-ASS-1403

Hardware & assembly drawings

Hardware assembly

TECHNAL®

LOCK 4-VENTS

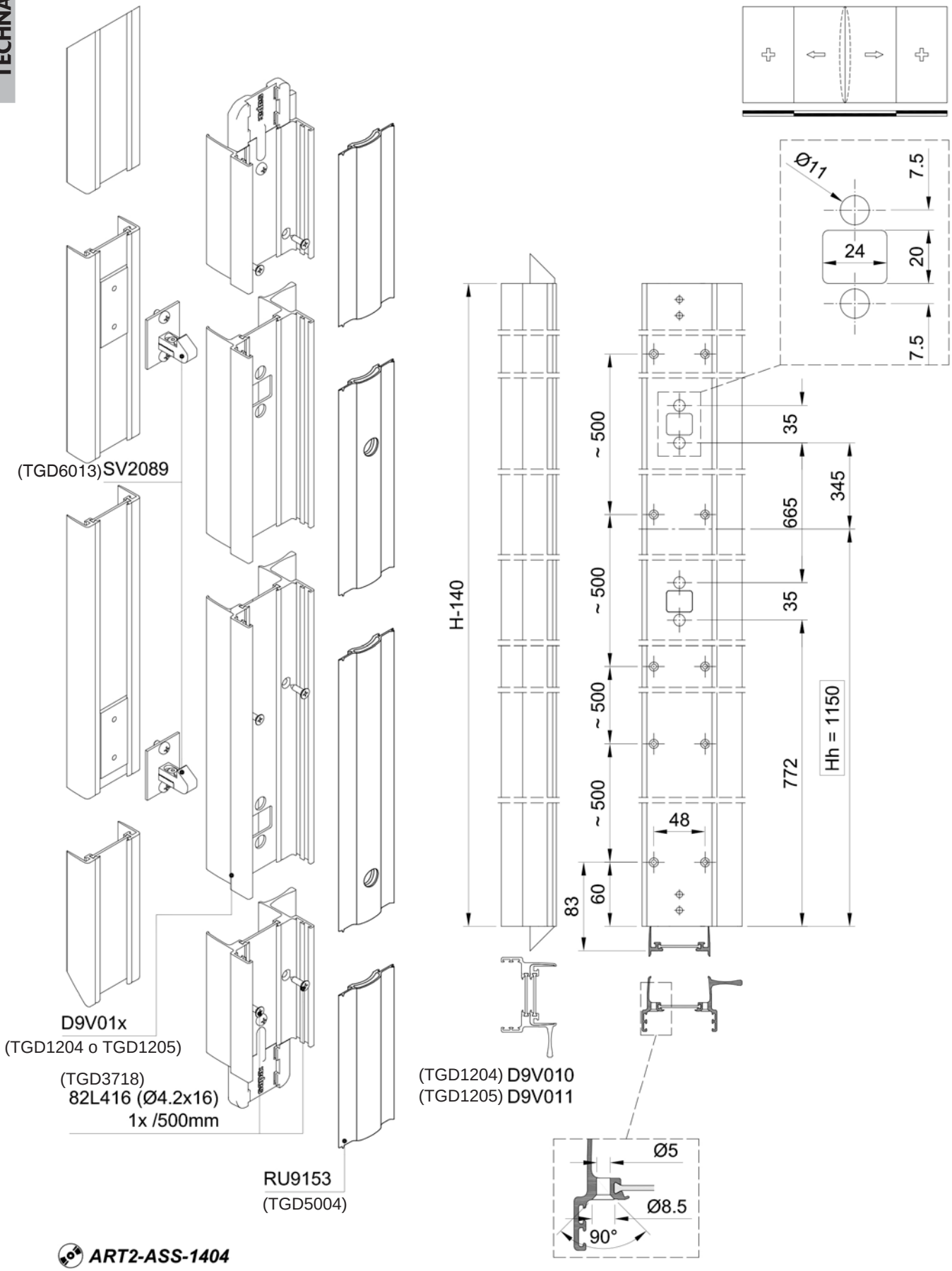

ART2-ASS-1404

All operations are based on handle at 1150 mm.

OPERATION ON D9V0XX FOR CO0199 (TGD3814)

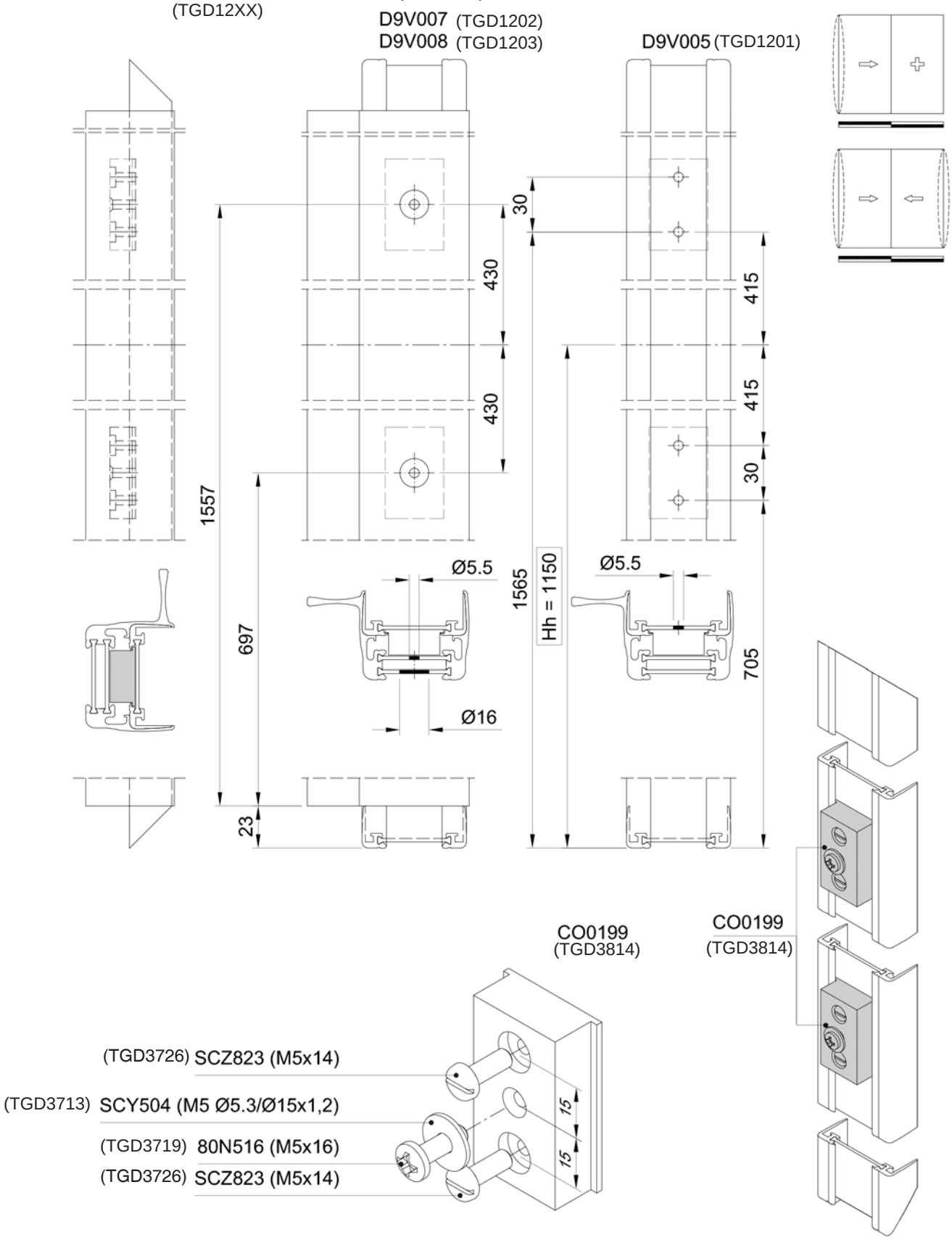

ART2-ASS-1405

All operations are based on handle at 1150 mm from bottom of vent.

Hardware & assembly drawings

Hardware assembly

TECHNAL®

SV2090 - LOCK SAFETY MECHANISM
(TGD6015)

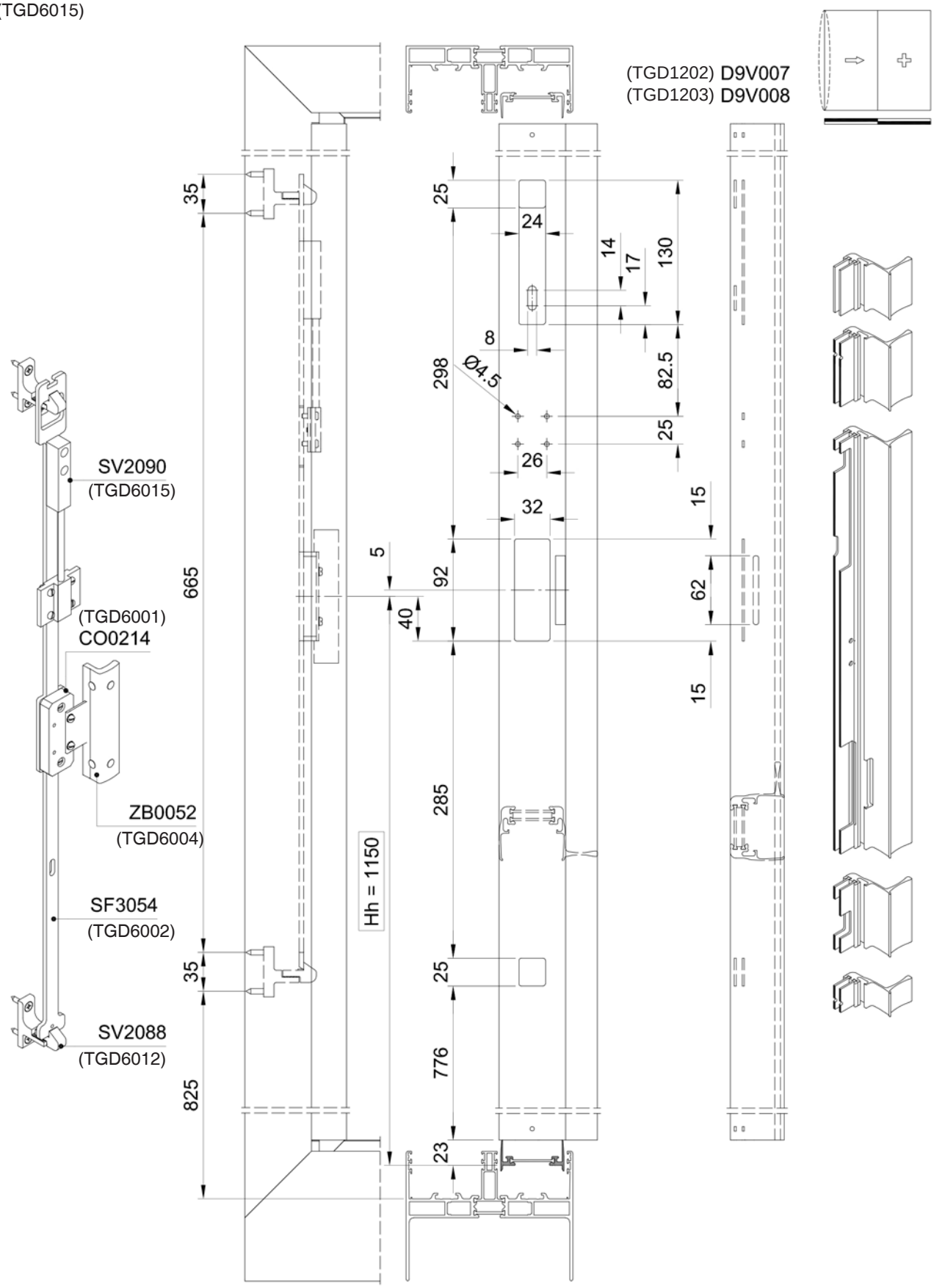

ART2-ASS-1406

All operations are based on handle at 1150 mm from bottom of vent.

SV2069 - OPTION FOR VENTILATION OPENING
(TGD6016)

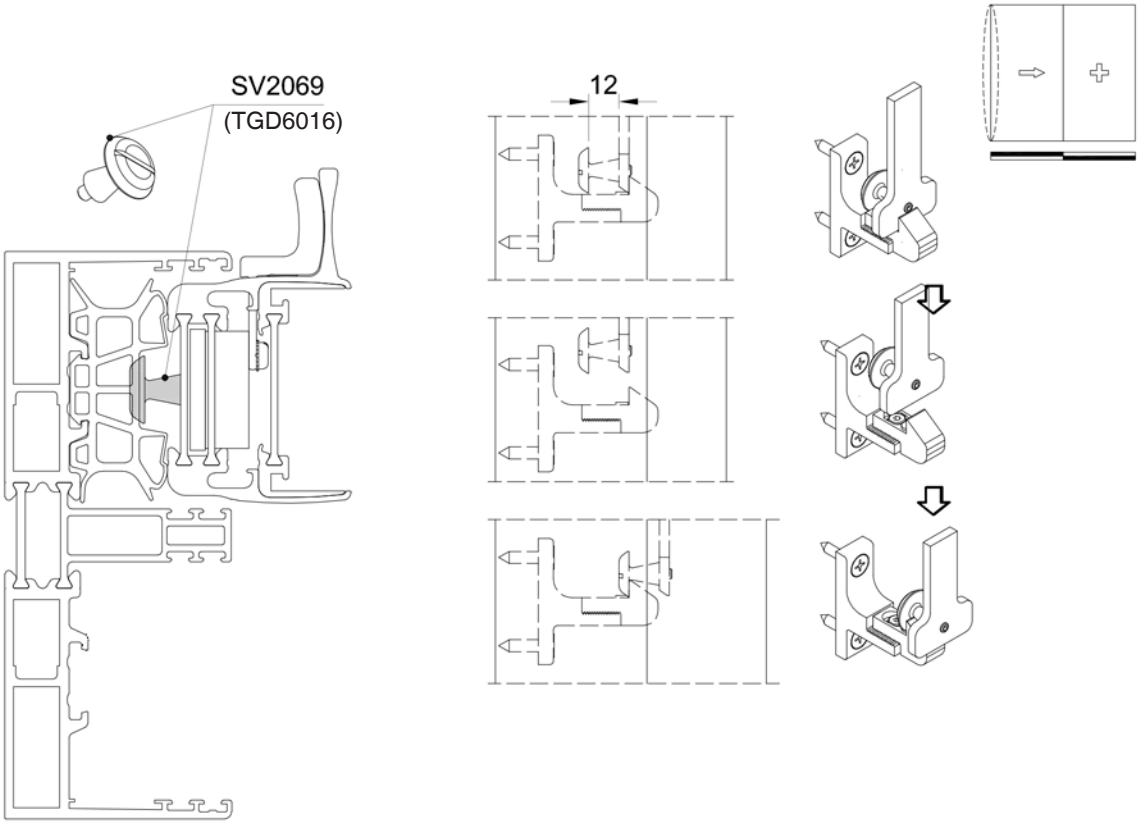

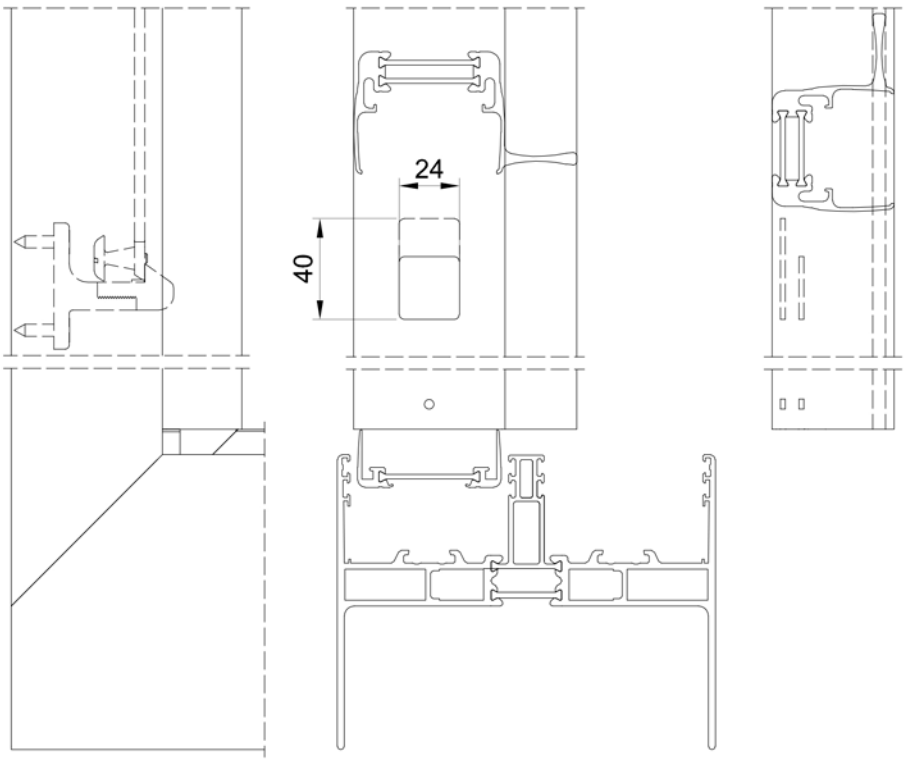

ART2-ASS-1415

Hardware & assembly drawings

Hardware assembly

ADDITIONAL LOCKING POINT SF3055 FOR H ≥ 2700

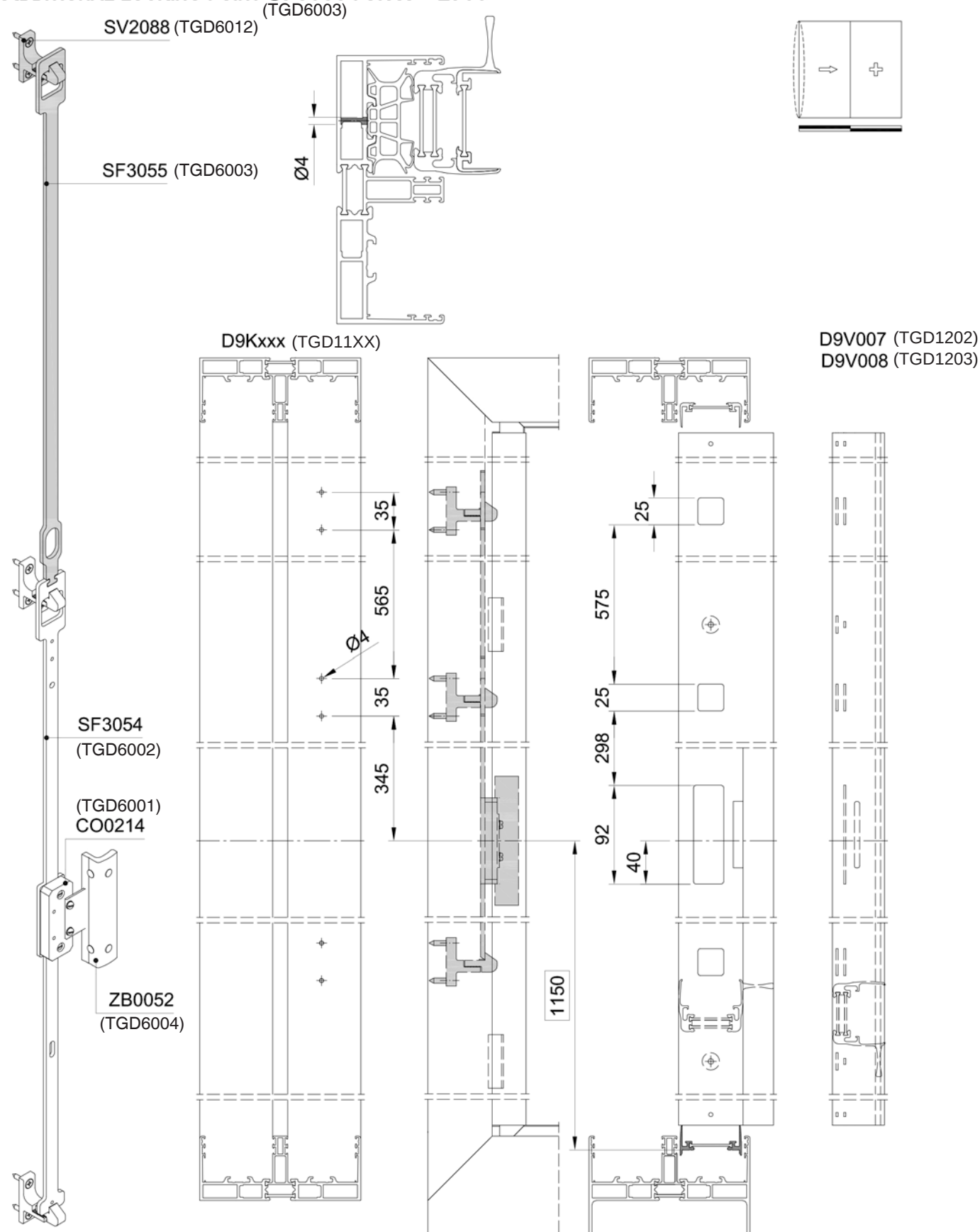

ART2-ASS-1407

SF2018 - SHOOTBOLT SOLUTION IN INTERLOCK
(TGD6009)

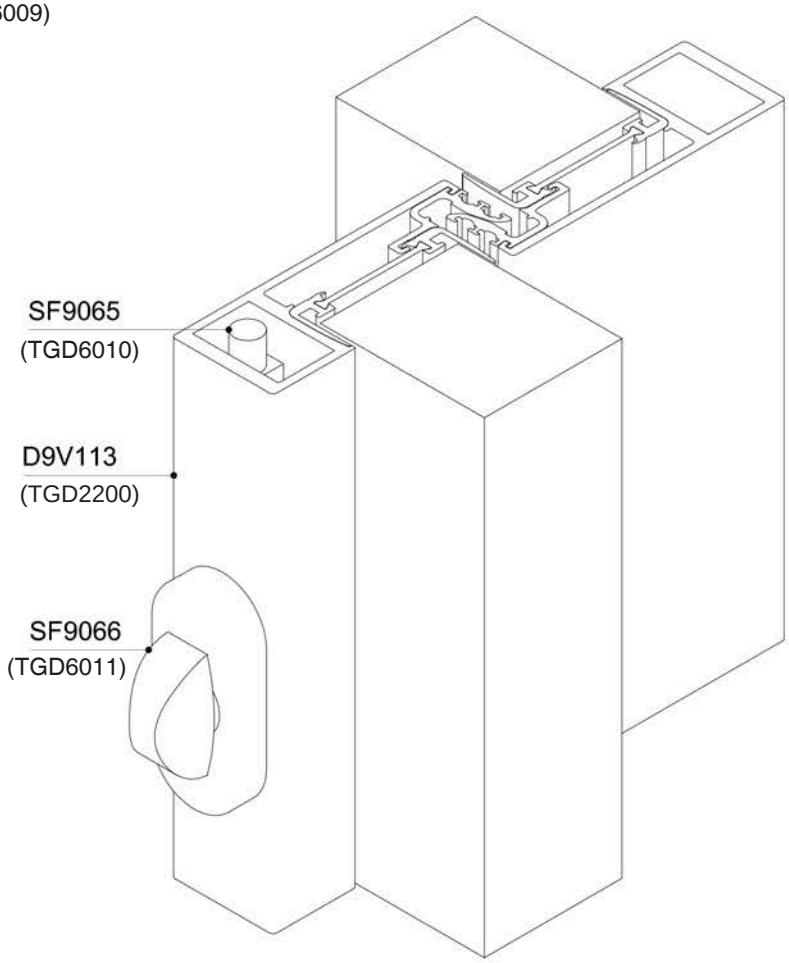

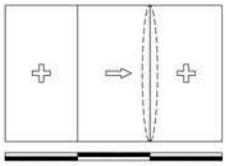

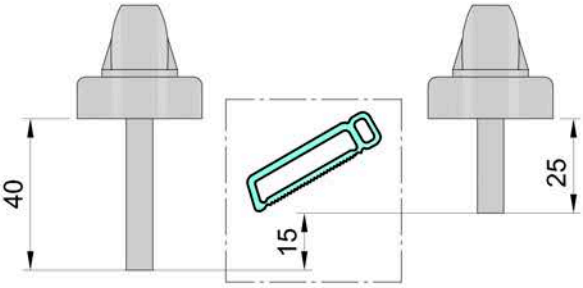

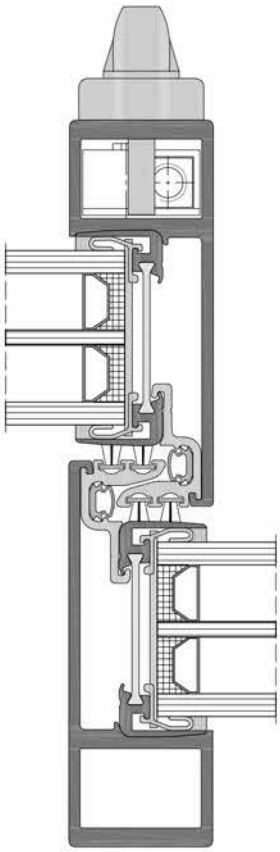

ART2-ASS-1408

Hardware & assembly drawings

Hardware assembly

TECHNAL®

SF2018: OPERATIONS ON D9V113
(TGD6009) (TGD2200)

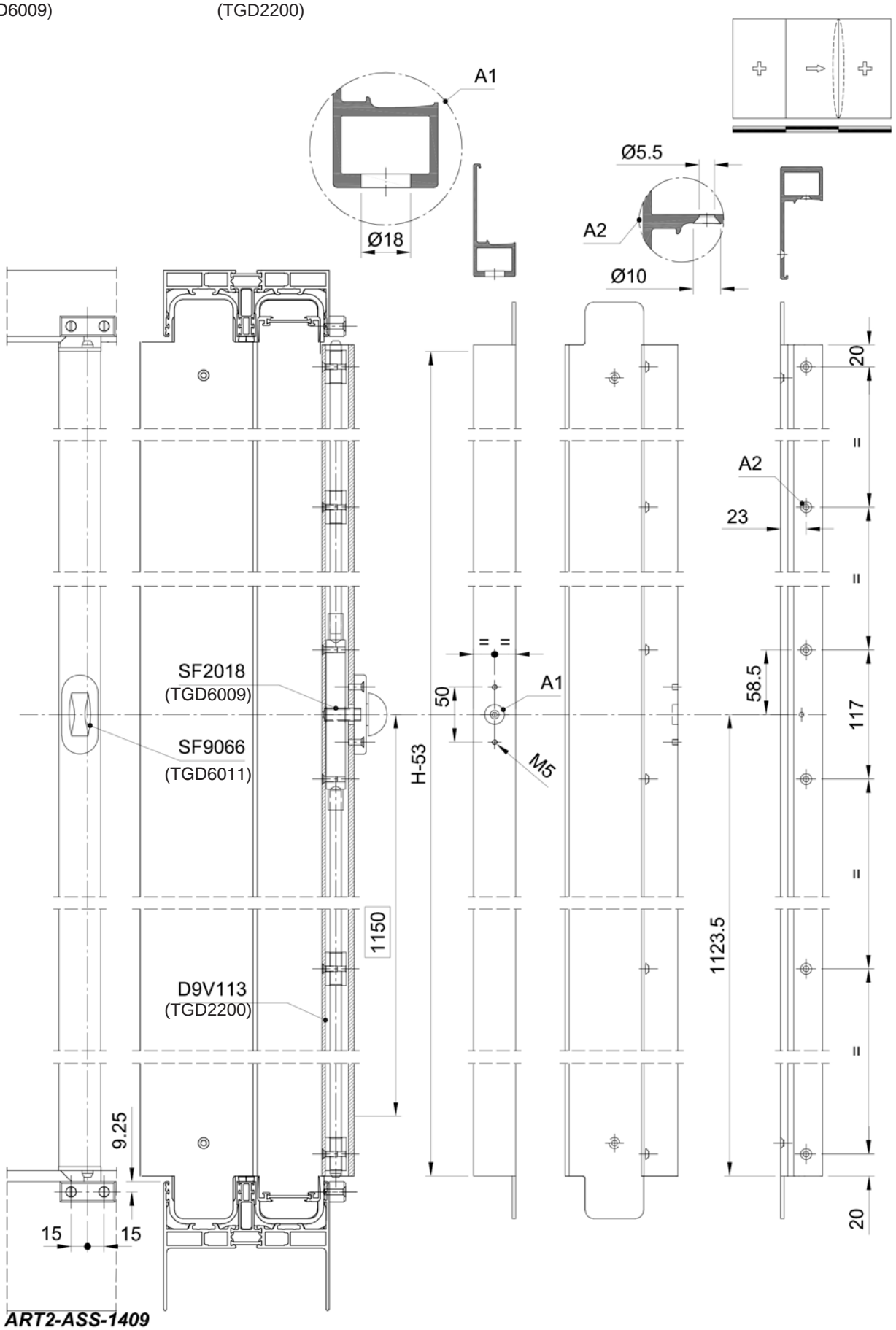

SF2018: POSITION LOCKINGPOINTS IN GUIDING PIECES
(TGD6009)

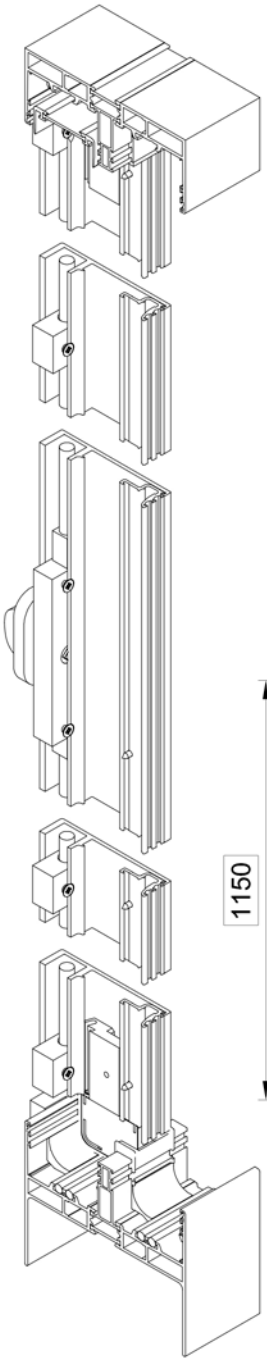

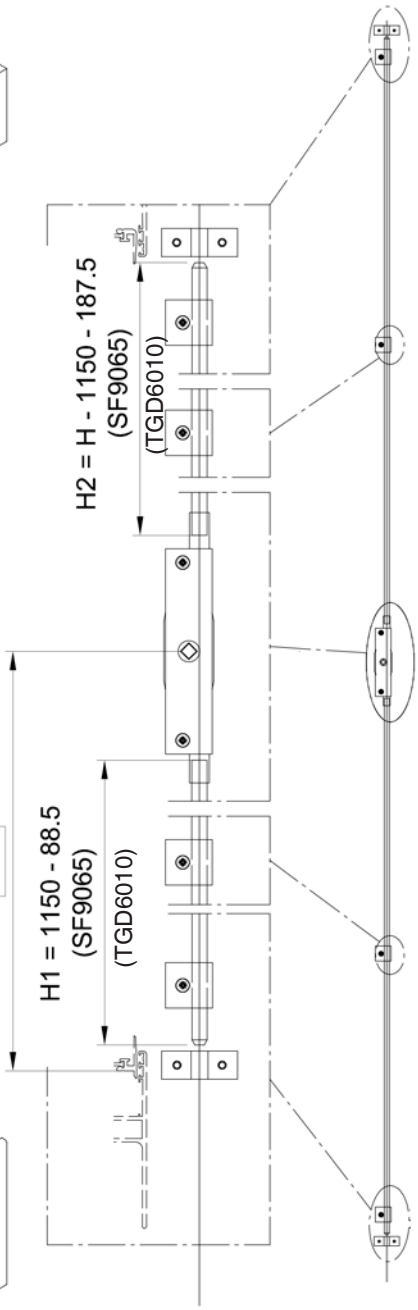

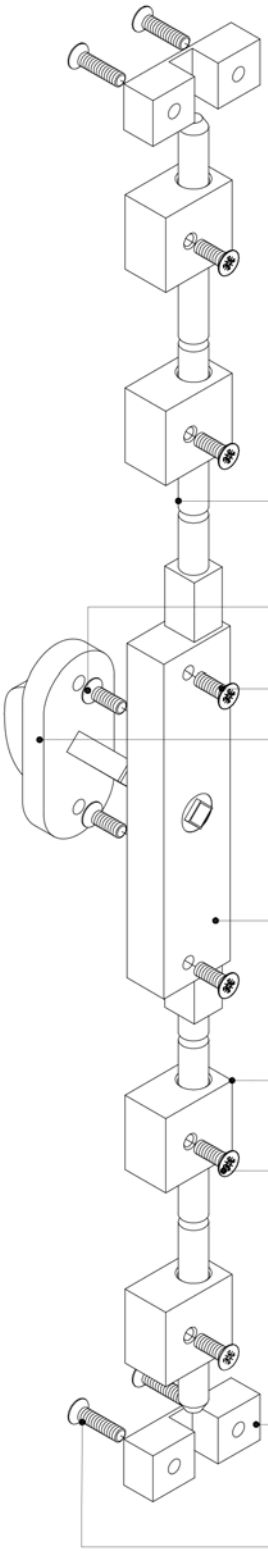

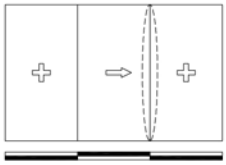

ART2-ASS-1410

Hardware & assembly drawings

Hardware assembly

TECHNAL®

ASSEMBLY SF2019 / SF2020
(TGD6005 / TGD6006)

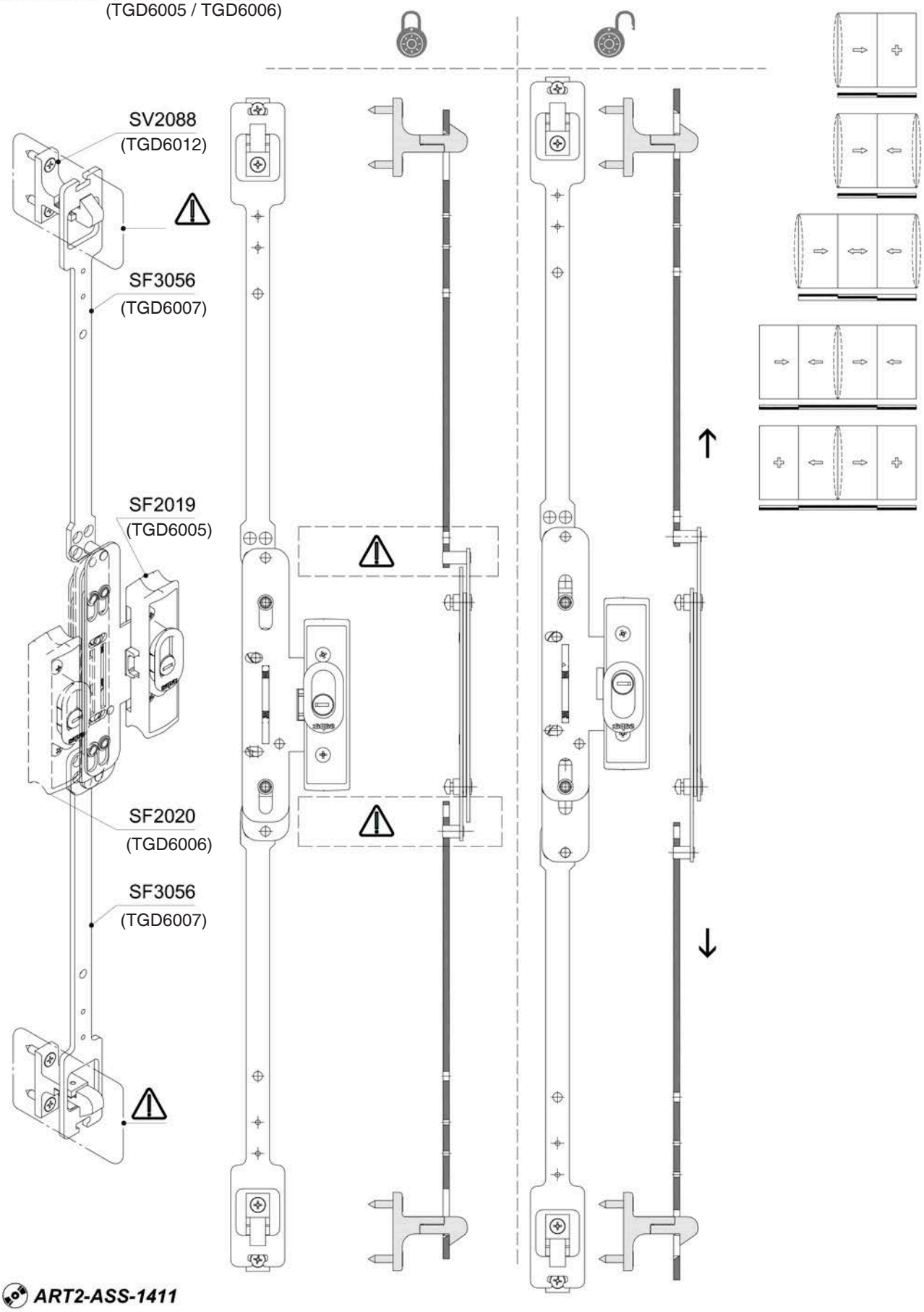

ART2-ASS-1411

Mounting in opposite direction fom each other.

ASSEMBLY LOCKING POINTS

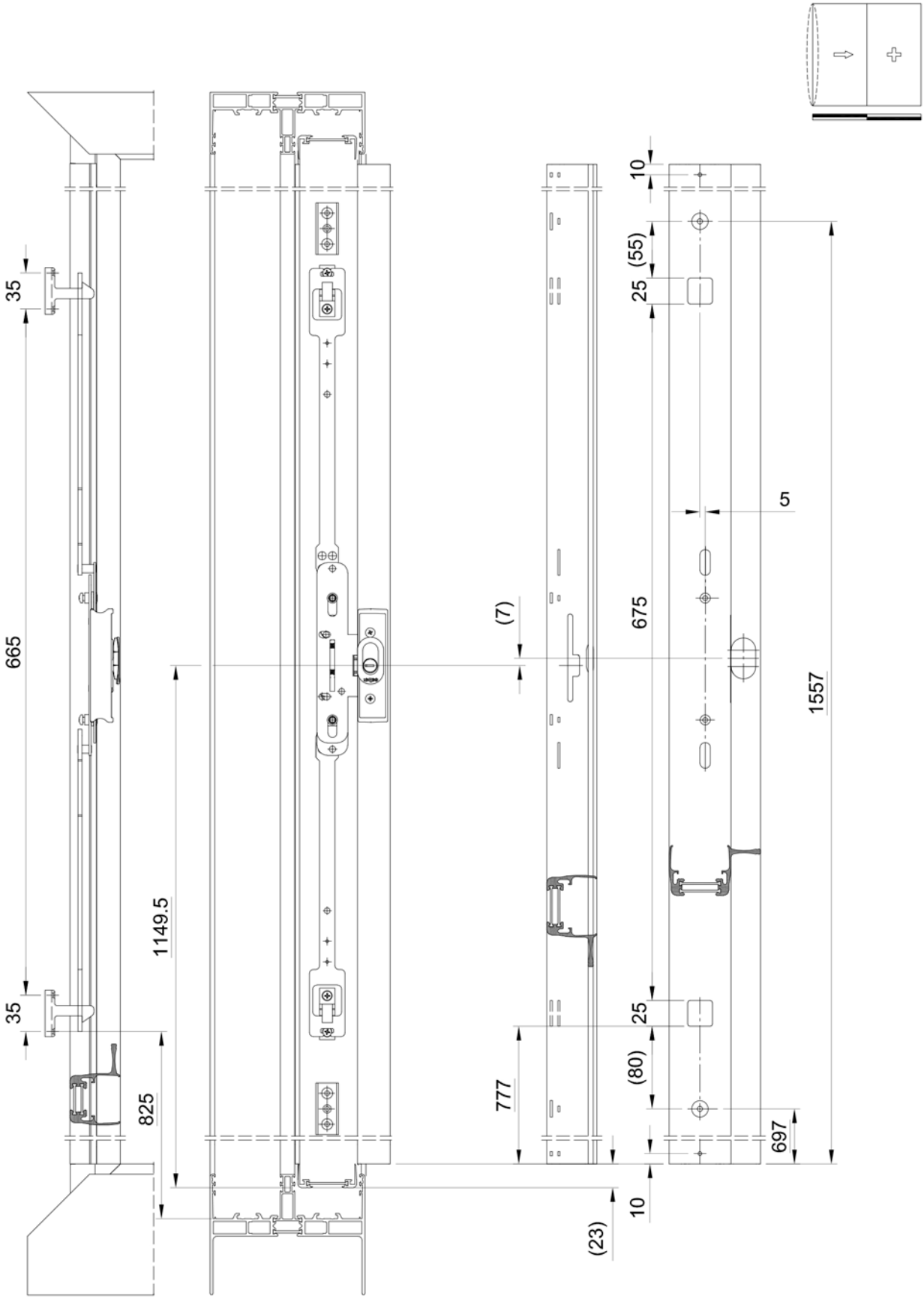

ART2-ASS-1412

Hardware & assembly drawings

Hardware assembly

TECHNAL®

DETAILS OF SF2019 / SF2020

(TGD6005 / TGD6006)

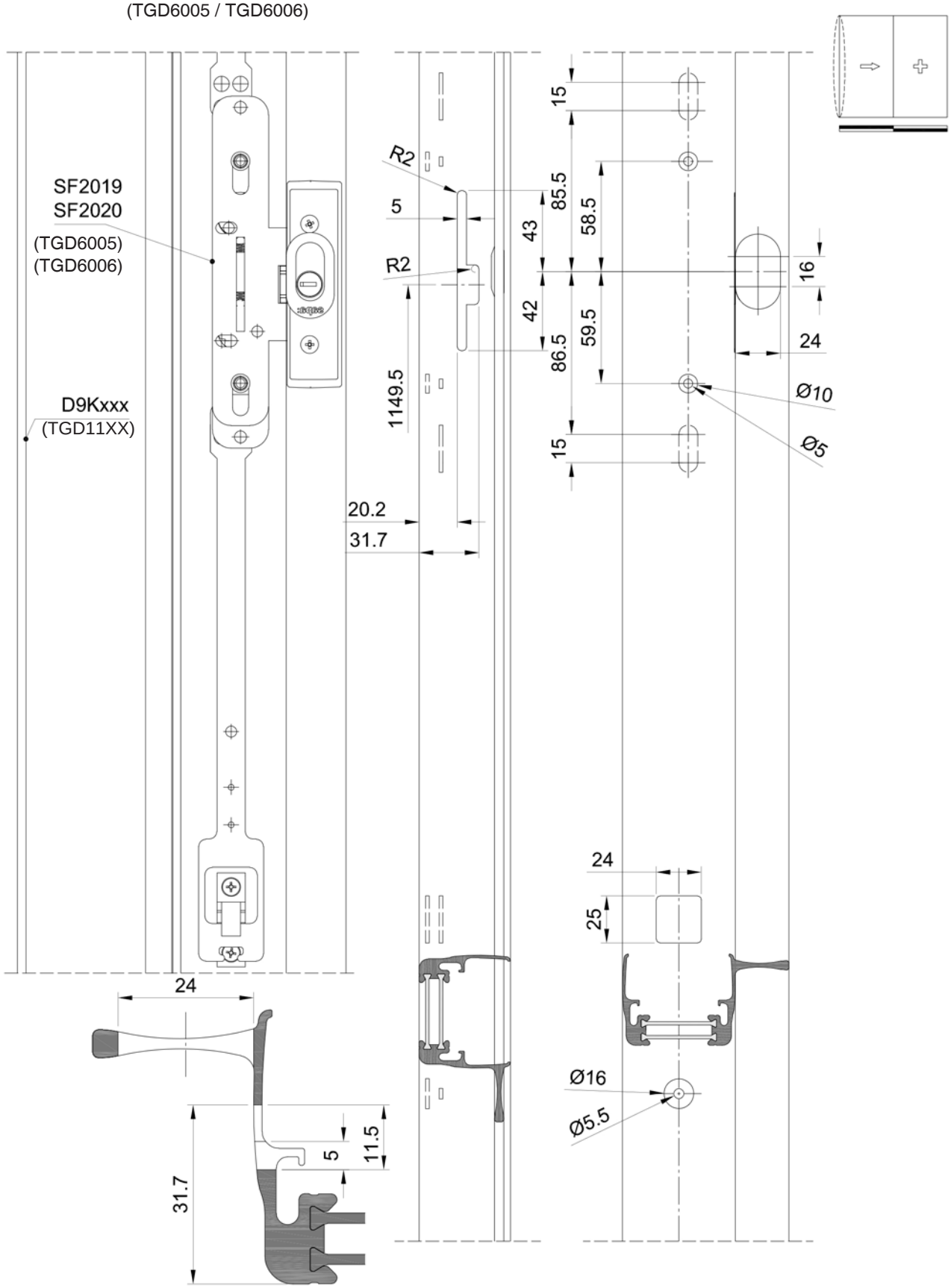

ART2-ASS-1413

ASSEMBLY SF2019 / SF2020

(TGD6005 / TGD6006)

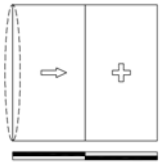

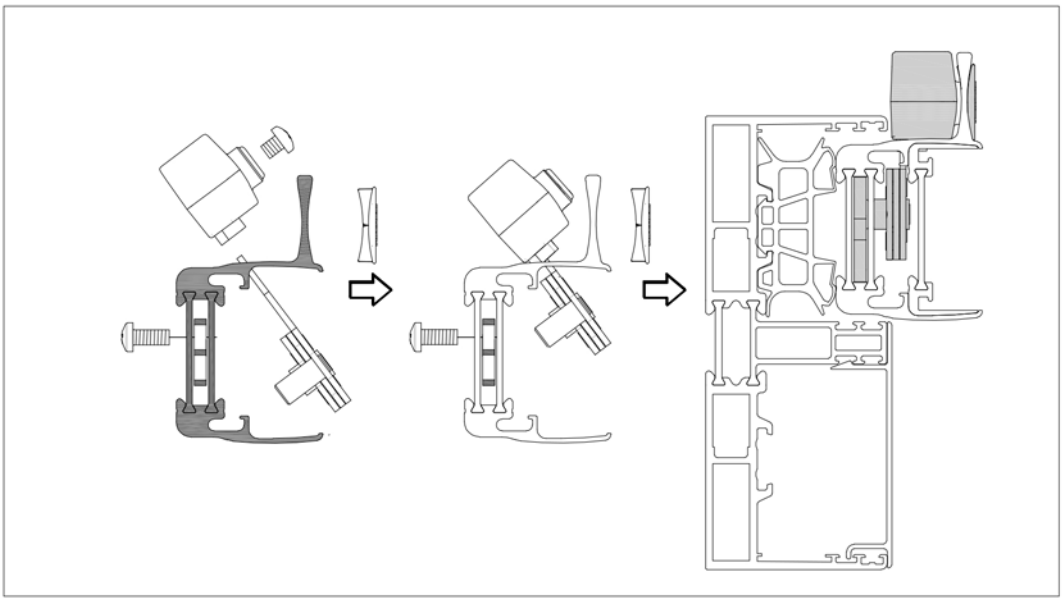

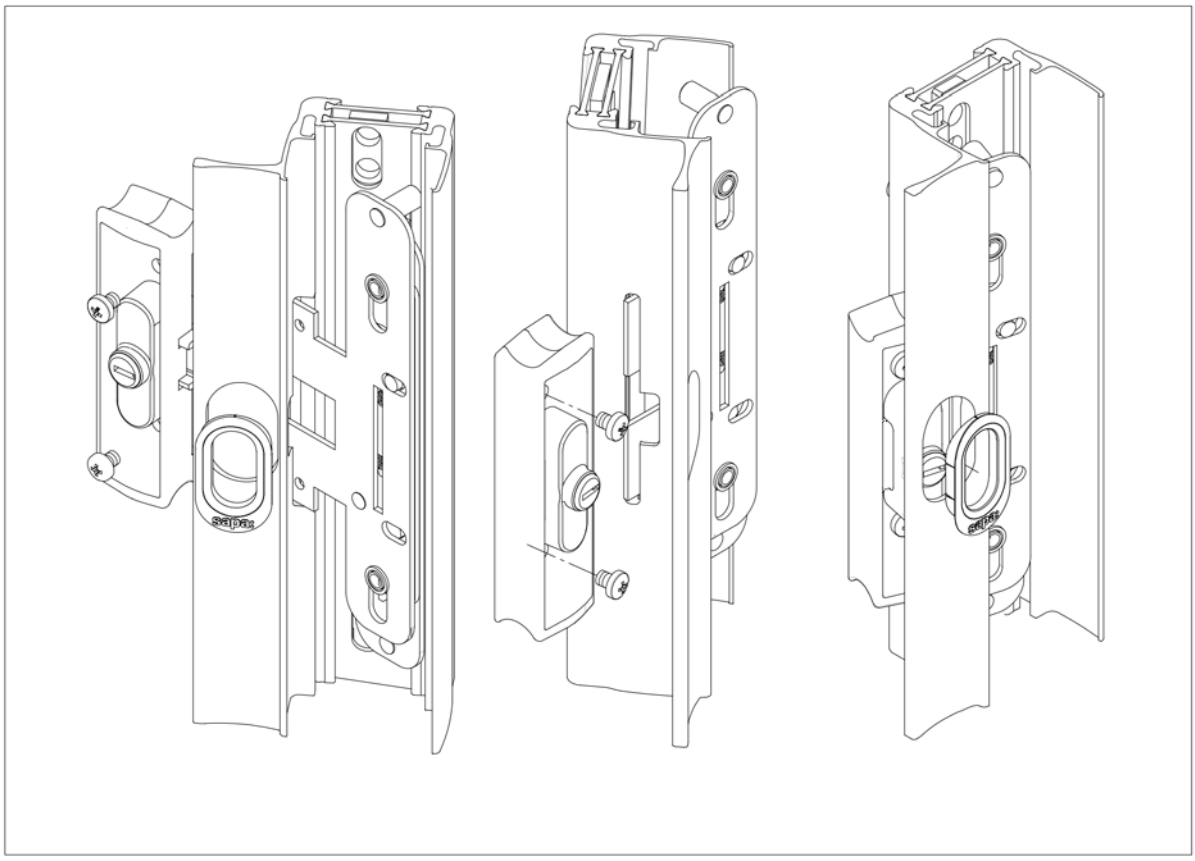

ART2-ASS-1414

Mounting in opposite direction from each other.

Enclosures

MAXIMUM VENT SIZE

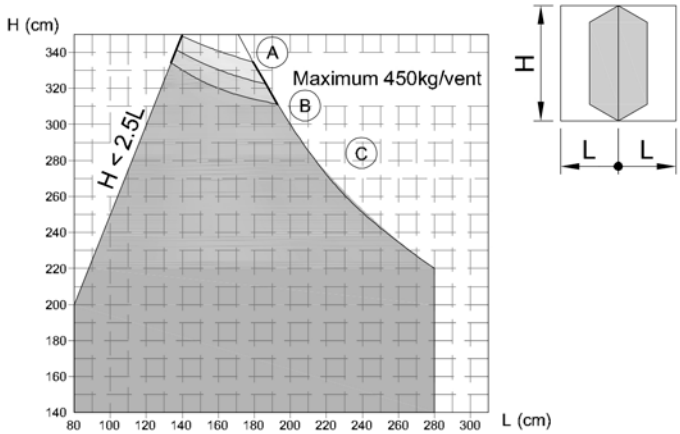

Windload 400 Pa

Class (A) 1/150

Class (B) 1/200

Class (C) 1/300

According to EN 12210

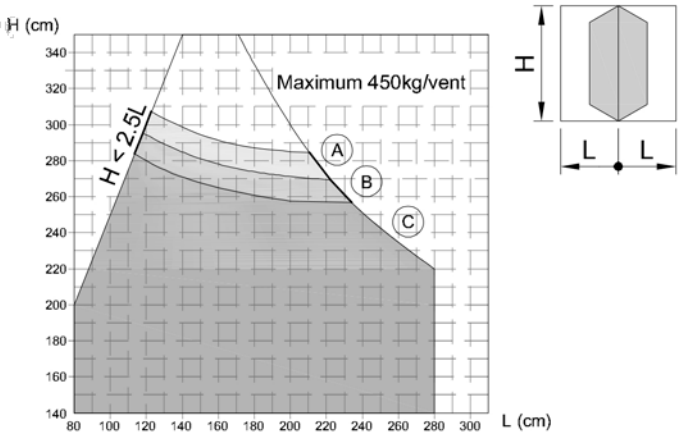

Windload 800 Pa

Class (A) 1/150

Class (B) 1/200

Class (C) 1/300

According to EN 12210

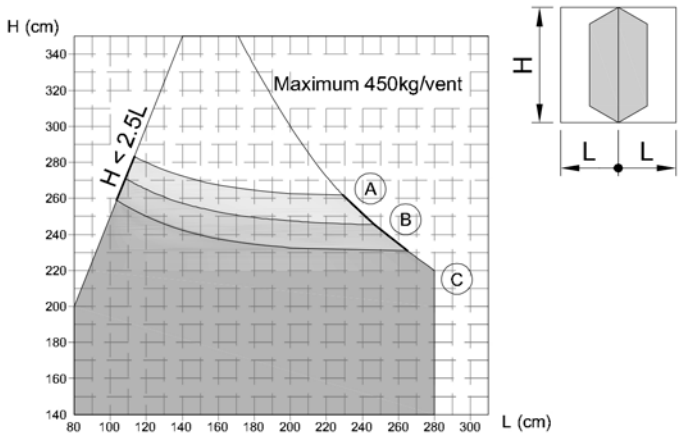

Windload 1200 Pa

Class (A) 1/150

Class (B) 1/200

Class (C) 1/300

According to EN 12210

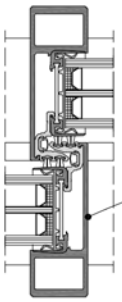

D9V113
(TGD2200)

Enclosures

Stability of D9V119 (TGD2202) - Fix - Slide - Fix

MAXIMUM VENT SIZE

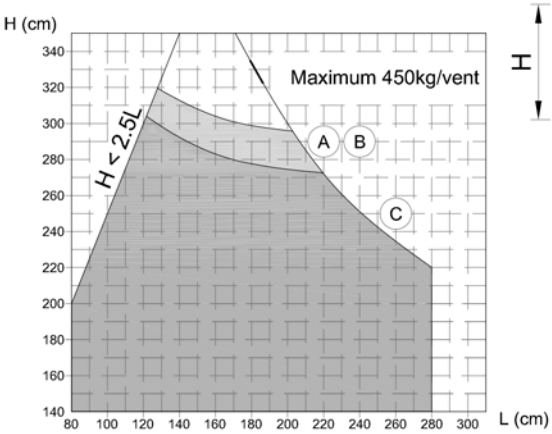

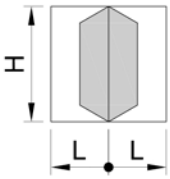

Windload 400 Pa

Class A 1/150

Class B 1/200

Class C 1/300

According to EN 12210

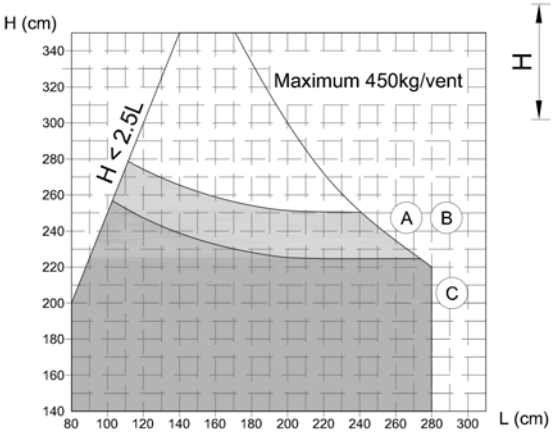

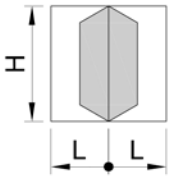

Windload 800 Pa

Class A 1/150

Class B 1/200

Class C 1/300

According to EN 12210

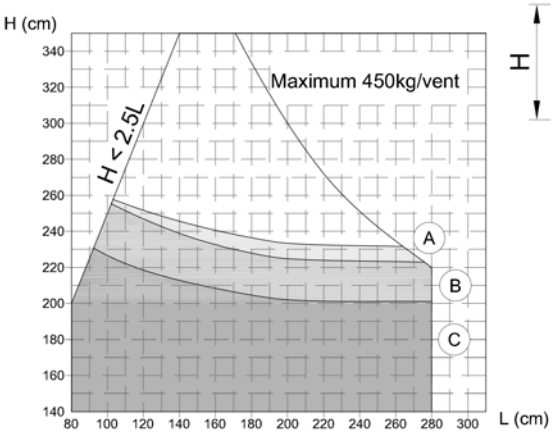

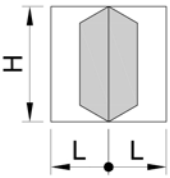

Windload 1200 Pa

Class A 1/150

Class B 1/200

Class C 1/300

According to EN 12210

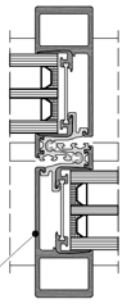

D9V119
(TGD2202)

MAXIMUM VENT SIZE

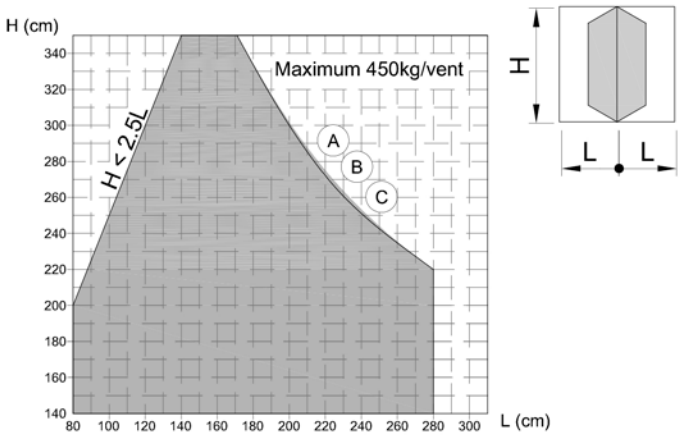

Windload 400 Pa

Class A 1/150

Class B 1/200

Class C 1/300

According to EN 12210

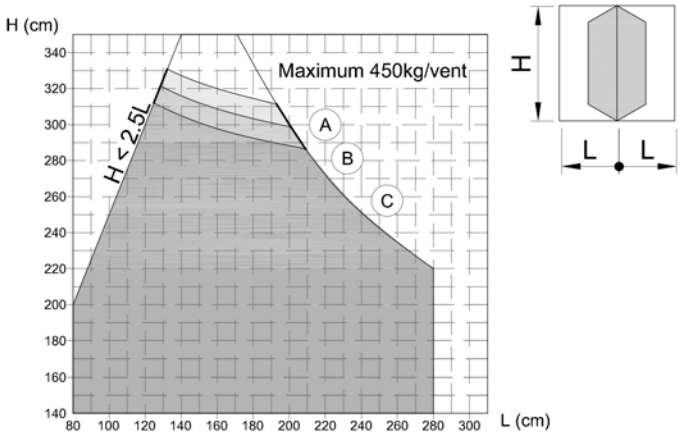

Windload 800 Pa

Class A 1/150

Class B 1/200

Class C 1/300

According to EN 12210

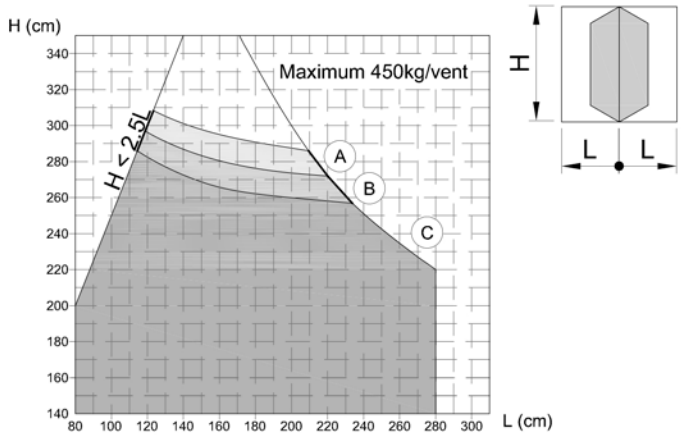

Windload 1200 Pa

Class A 1/150

Class B 1/200

Class C 1/300

According to EN 12210

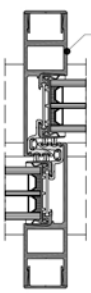

Enclosures

Stability of D9V120(TGD2203) - Fix - Slide - Fix

MAXIMUM VENT SIZE

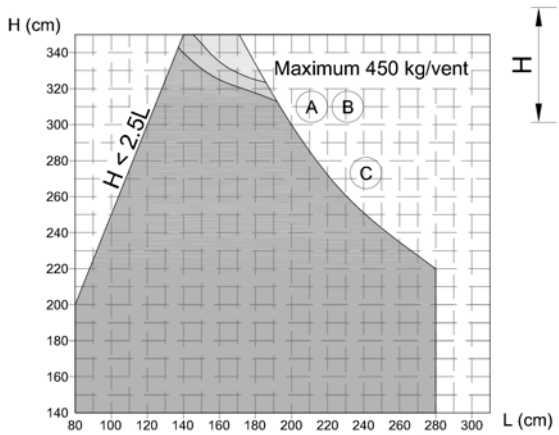

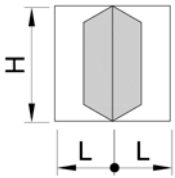

Windload 400 Pa

Class A 1/150

Class B 1/200

Class C 1/300

According to EN 12210

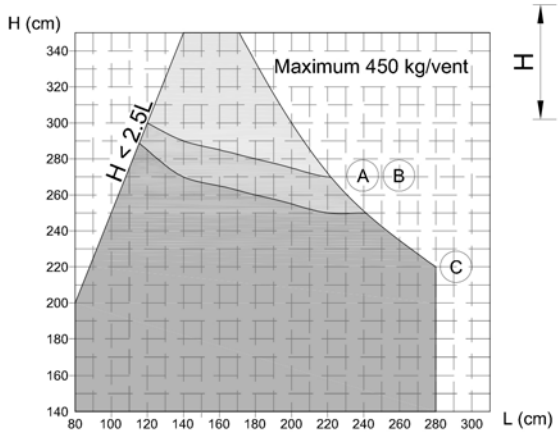

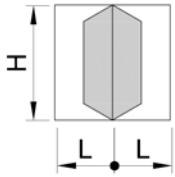

Windload 800 Pa

Class A 1/150

Class B 1/200

Class C 1/300

According to EN 12210

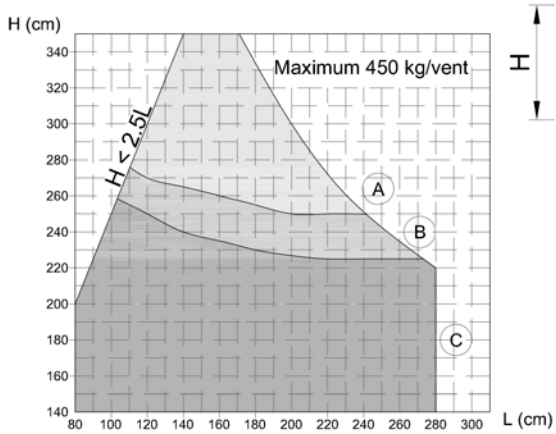

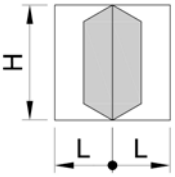

Windload 1200 Pa

Class A 1/150

Class B 1/200

Class C 1/300

According to EN 12210

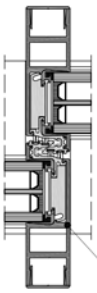

D9V120
(TGD2203)

MAXIMUM VENT SIZE

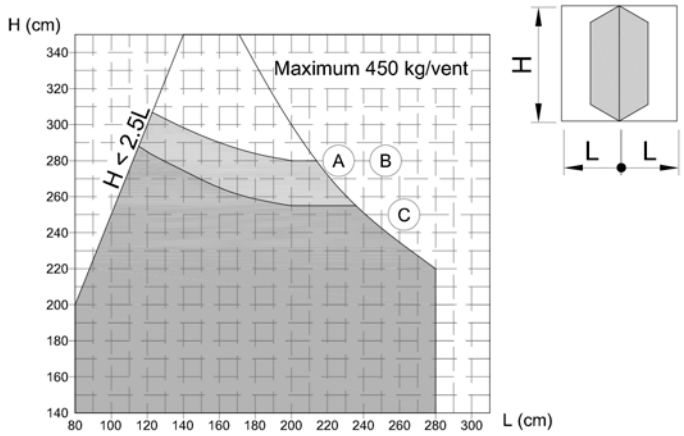

Windload 400 Pa

Class A 1/150

Class B 1/200

Class C 1/300

According to EN 12210

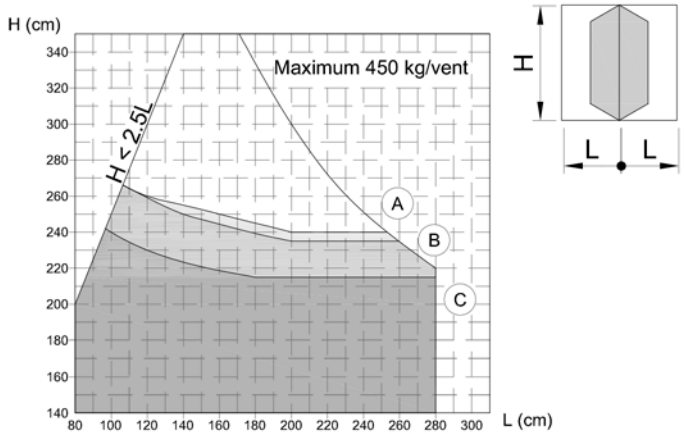

Windload 800 Pa

Class A 1/150

Class B 1/200

Class C 1/300

According to EN 12210

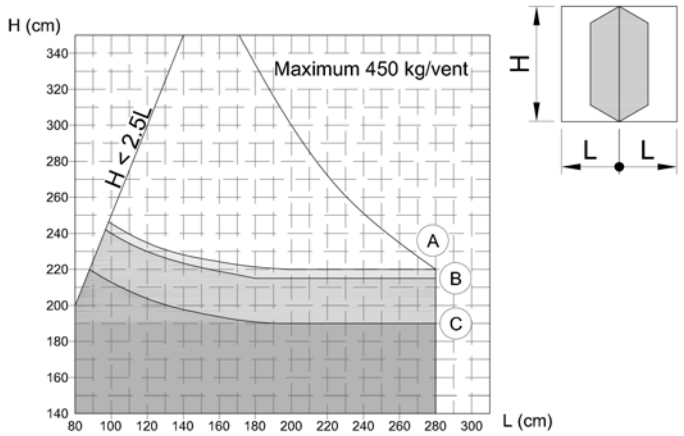

Windload 1200 Pa

Class A 1/150

Class B 1/200

Class C 1/300

According to EN 12210

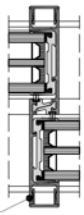

D9V117
(TGD2206)

Enclosures

Stability of D9V139(TGD2204)

TECHNAL®

MAXIMUM VENT SIZE

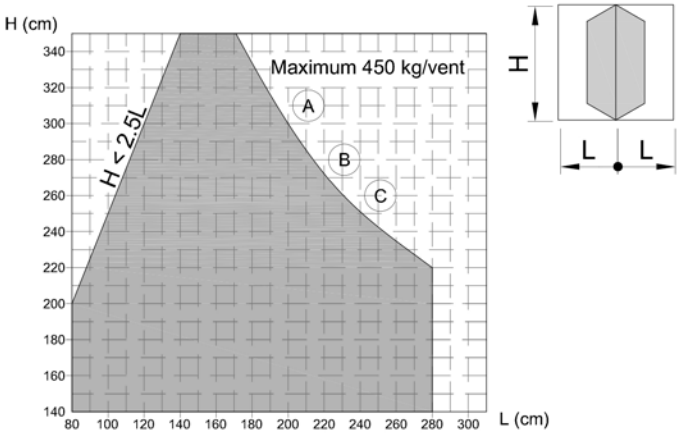

Windload 400 Pa

Class A 1/150

Class B 1/200

Class C 1/300

According to EN 12210

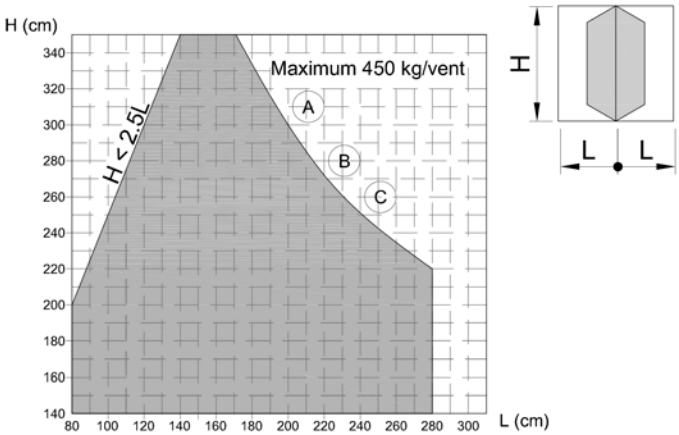

Windload 800 Pa

Class A 1/150

Class B 1/200

Class C 1/300

According to EN 12210

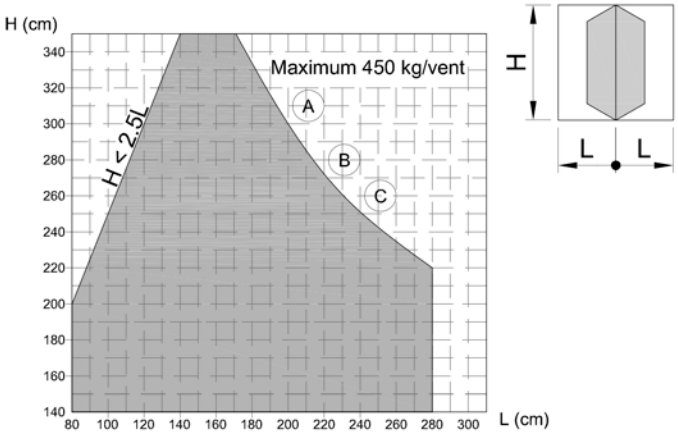

Windload 1200 Pa

Class A 1/150

Class B 1/200

Class C 1/300

According to EN 12210

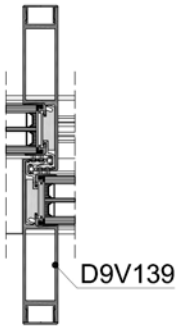

D9V139 (TGD2204)

MAXIMUM VENT SIZE

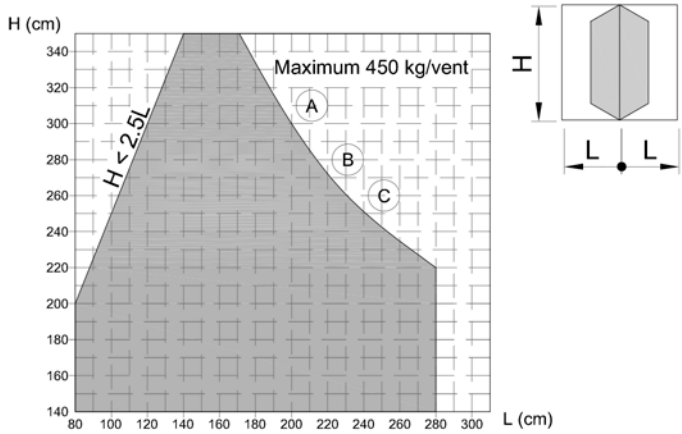

Windload 400 Pa

Class (A) 1/150

Class (B) 1/200

Class (C) 1/300

According to EN 12210

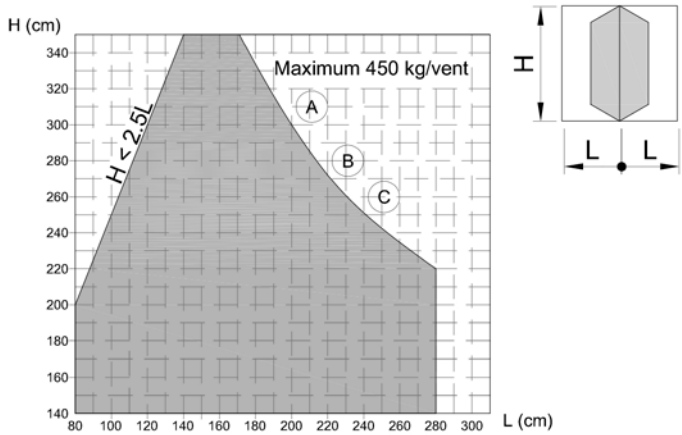

Windload 800 Pa

Class (A) 1/150

Class (B) 1/200

Class (C) 1/300

According to EN 12210

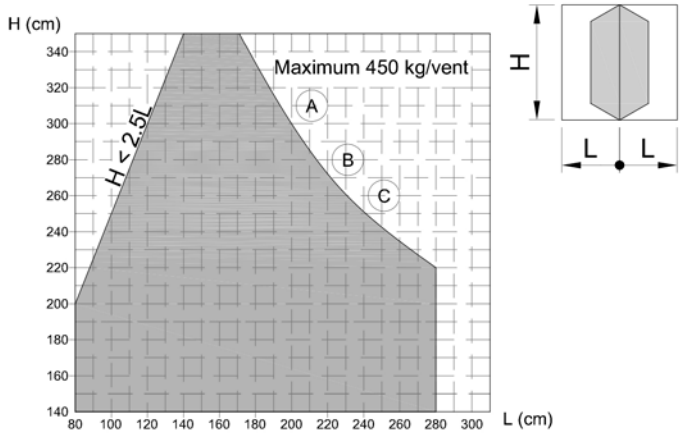

Windload 1200 Pa

Class (A) 1/150

Class (B) 1/200

Class (C) 1/300

According to EN 12210

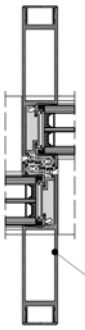

D9V140 (TGD2205)

Document number 0364.002